LVRT Induced Frequency Stability in Offshore Wind Power System

M. M. Kabsha, Zakir H. Rather

IIT Bombay, India

2nd International Conference on:
Large-Scale Grid Integration of Renewable Energy in India
4-6 Sept 2019

Outline

- Introduction
- OWF LVRT Requirements
- OWF Modelling
- OWF LVRT Capability
- Results and Discussion
- Conclusion

Statistics of Global Wind Power Installation

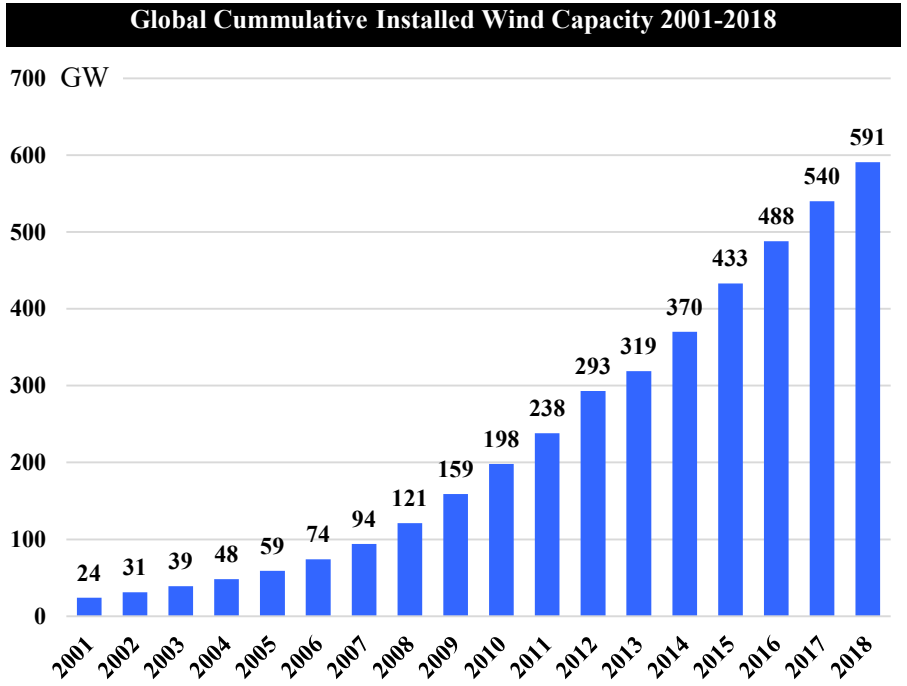

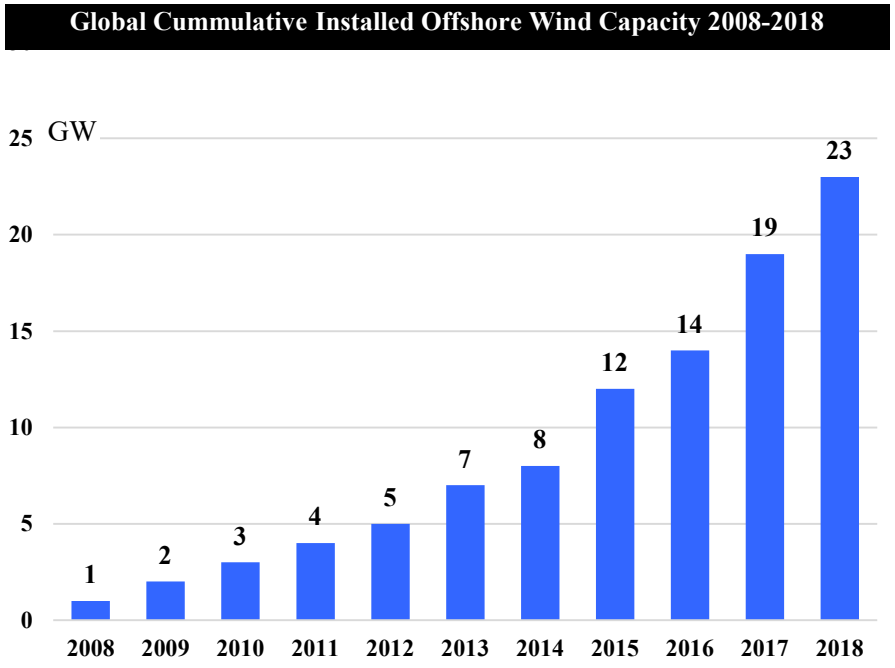

Global Wind Energy Council (GWEC), "GWEC Report 2018," 2019.

OWF LVRT Requirements

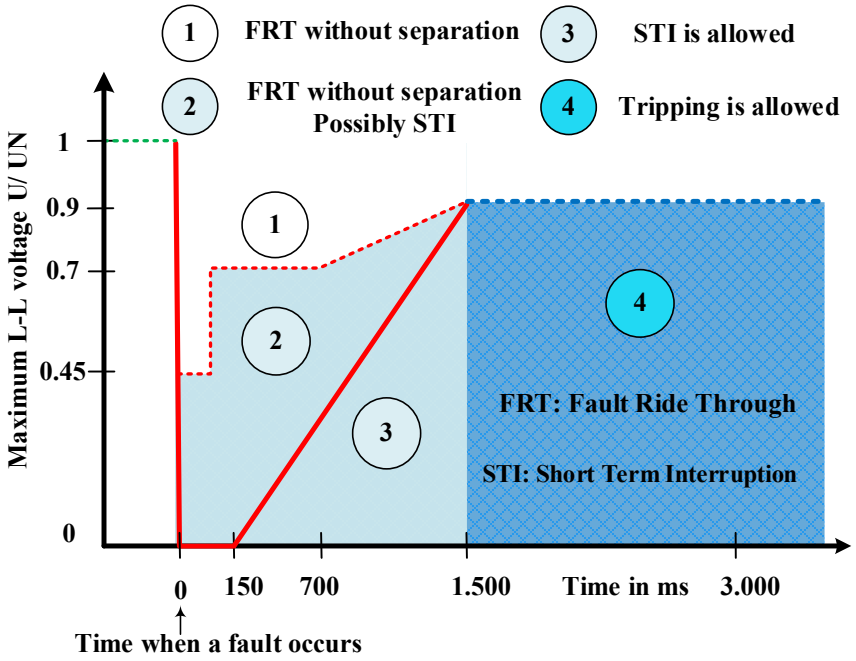

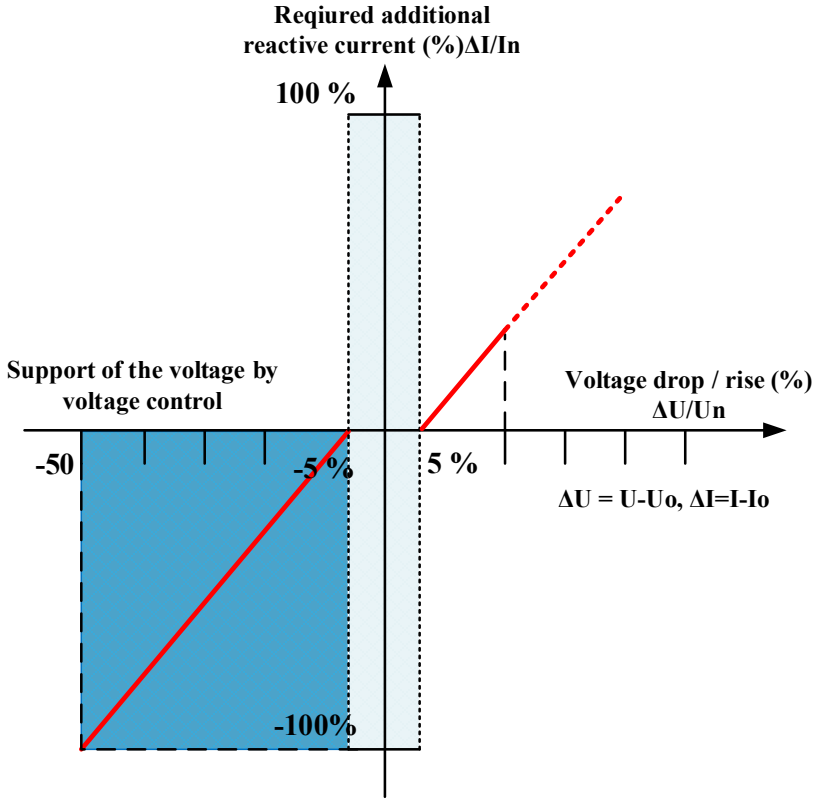

TenneT TSO GmbH, "Requirements for Offshore Grid Connections in the Grid of TenneT TSO GmbH," 2012.

Tennet TSO GmbH, "Grid Code - High and extra high voltage," November, 2015

OWF Modelling

Full Converter based WTG and WF

WTG

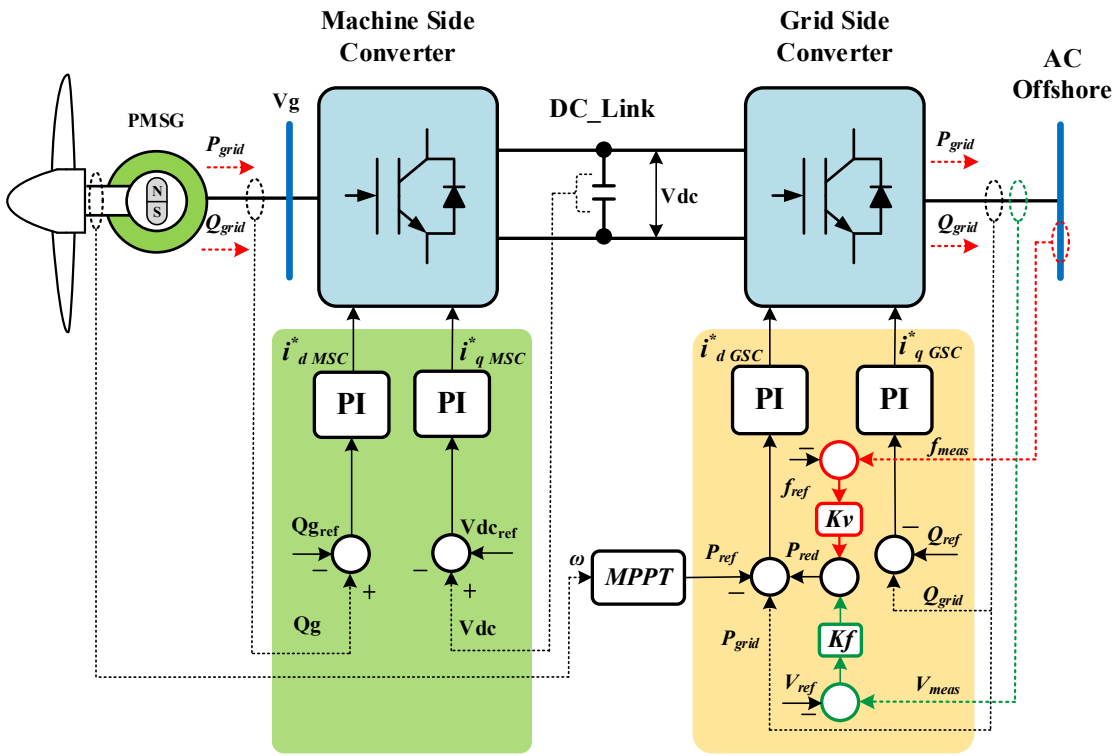

Offshore Wind Farm

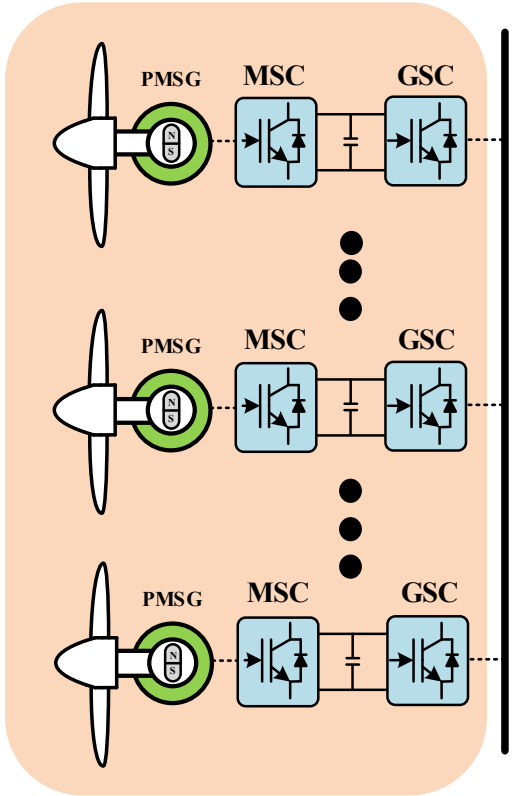

M. Pöller and S. Achilles, "Aggregated Wind Park Models for Analyzing Power System Dynamics," *in 4th International Workshop on Large-scale Integration of Wind Power and Transmission Networks for Offshore Wind Farms*, 2003, pp. 1–10

HVDC Converter Control

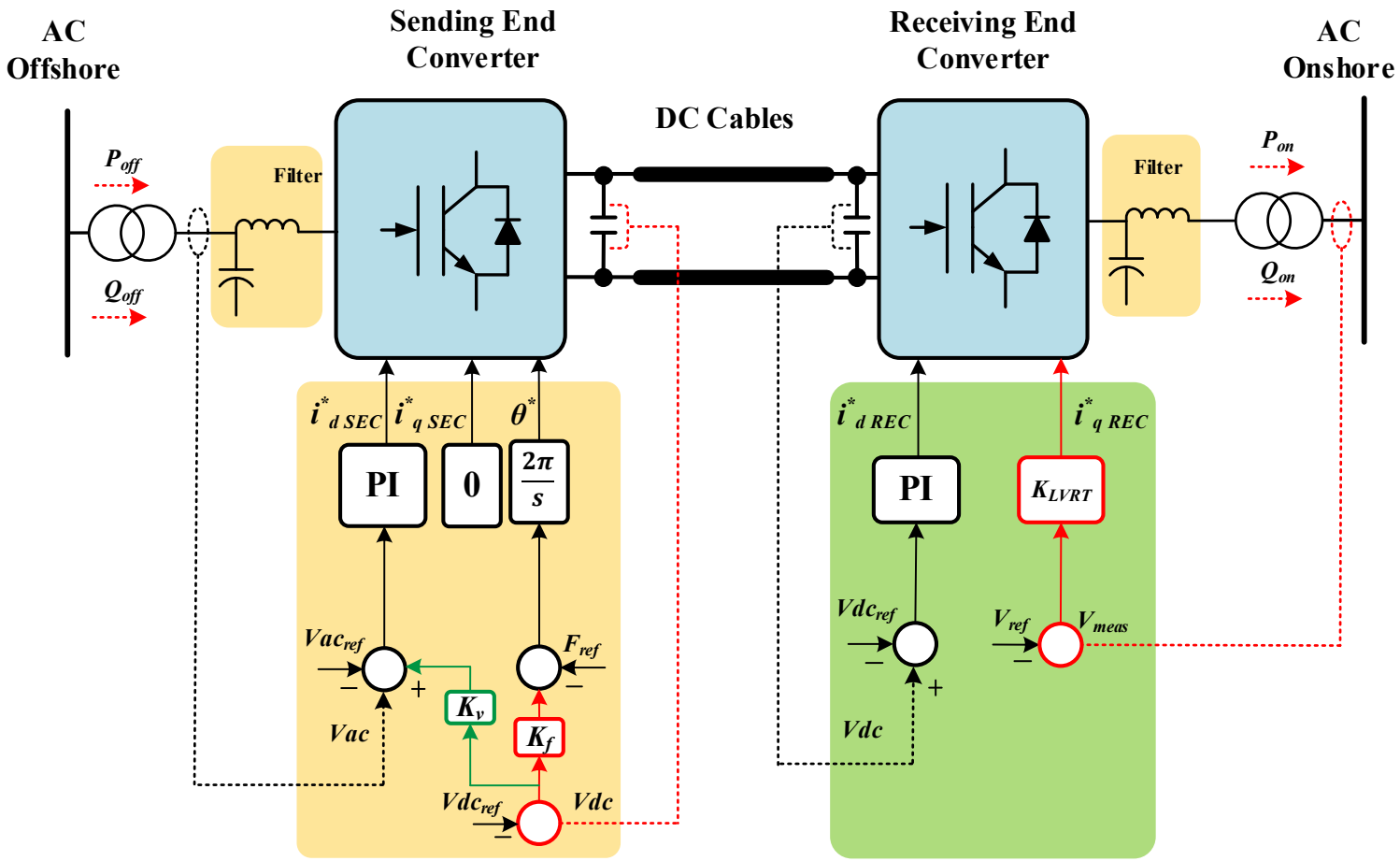

S. Dennetière et al., "The CIGRE B4 DC Grid Test System," *CIGRE Electra Mag.*, 2013

Test System

Modified IEEE 39 bus

Wind Farm no	Generator Replaced	No of WT	Total MW
1	G 4	469	703.5
2	G10	186	279
3	G 7	416	624
4	G 3	482	723
5	G 9	617	925.5

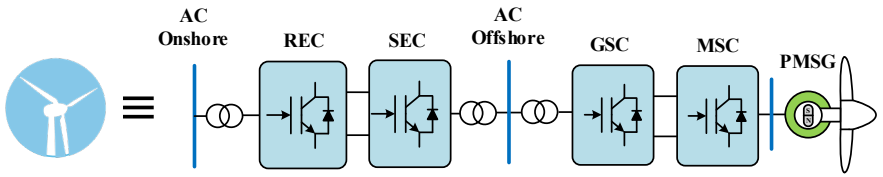

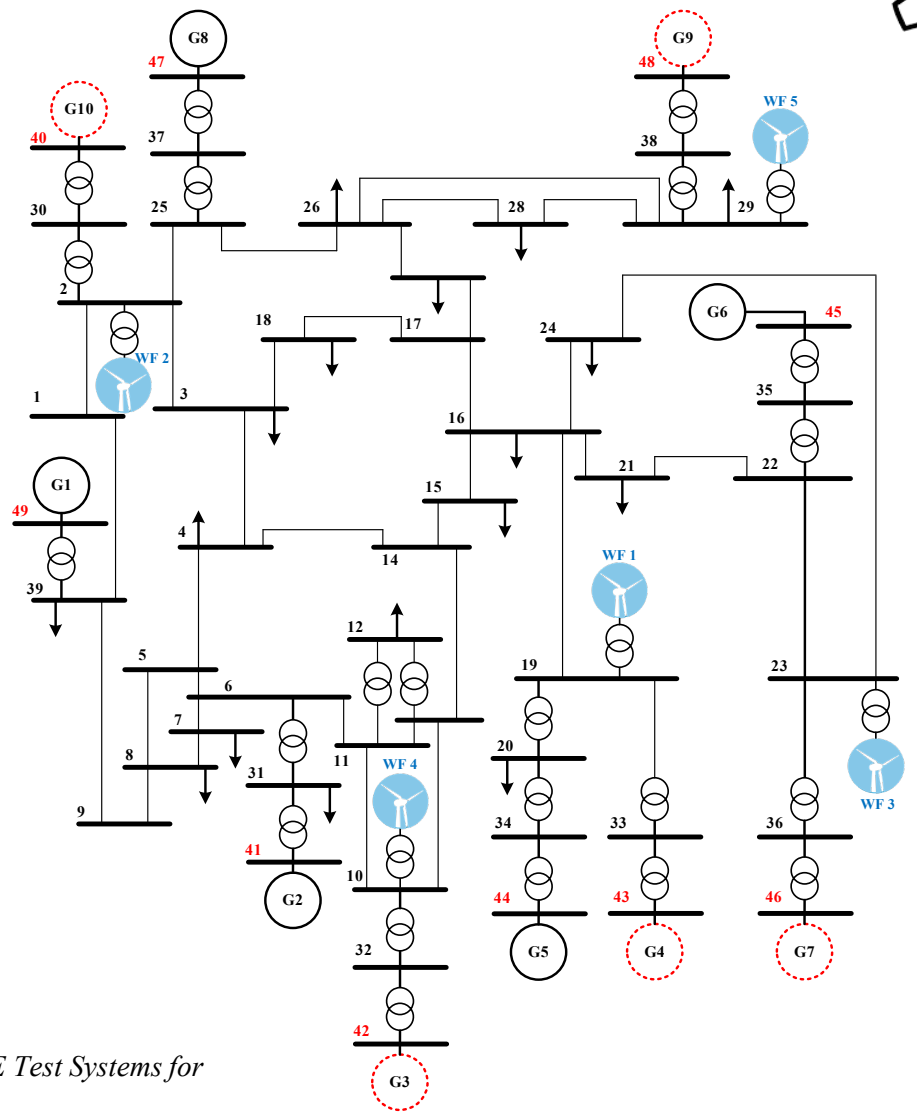

P. Demetriou, M. Asprou, J. Quiros-Tortos, and E. Kyriakides, "*Dynamic IEEE Test Systems for Transient Analysis,*" *IEEE Syst. J., vol.* 11, no. 4, pp. 1–10, 2015.

OWF LVRT Capability

Capability to satisfy LVRT

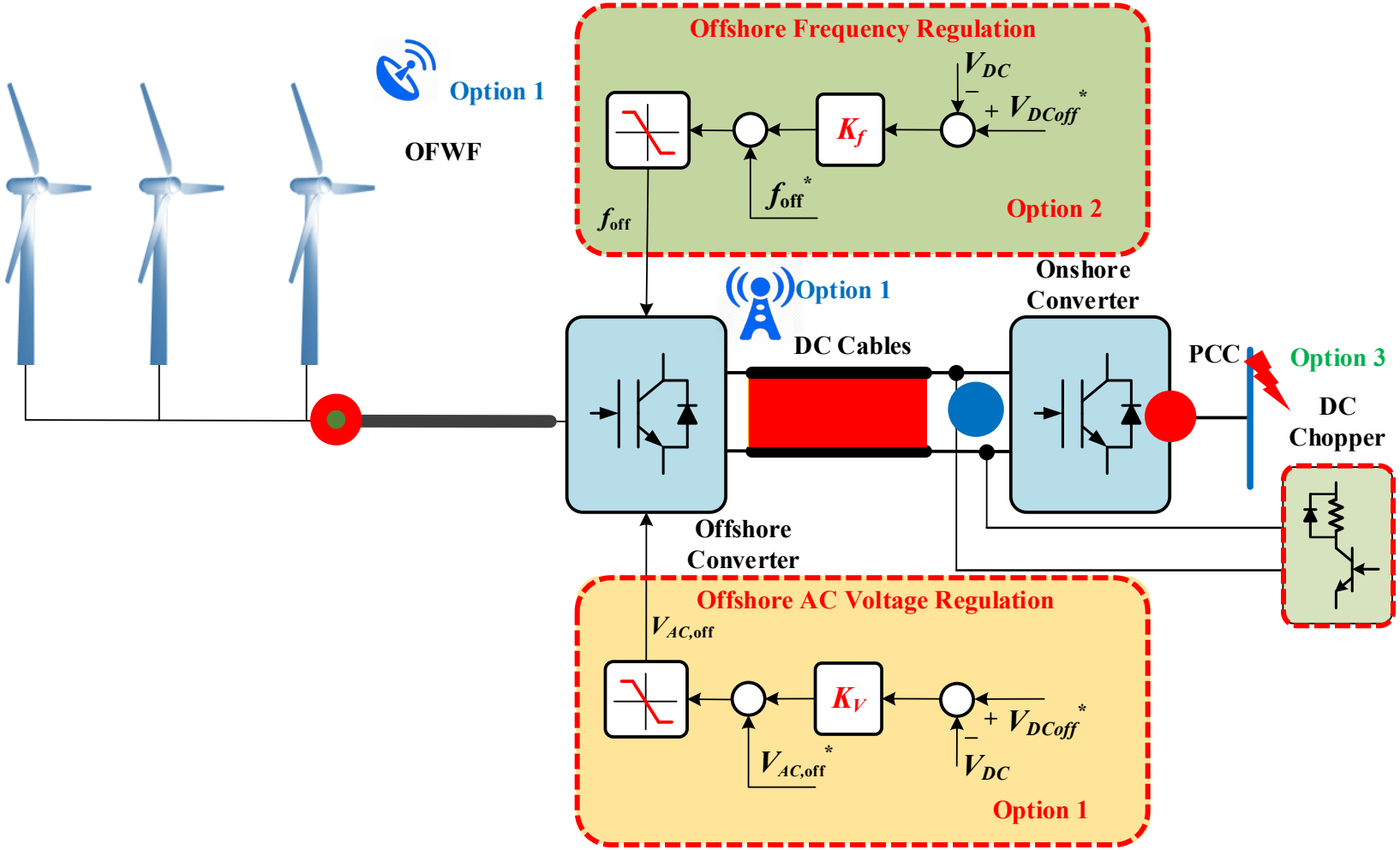

Conventional LVRT Strategy

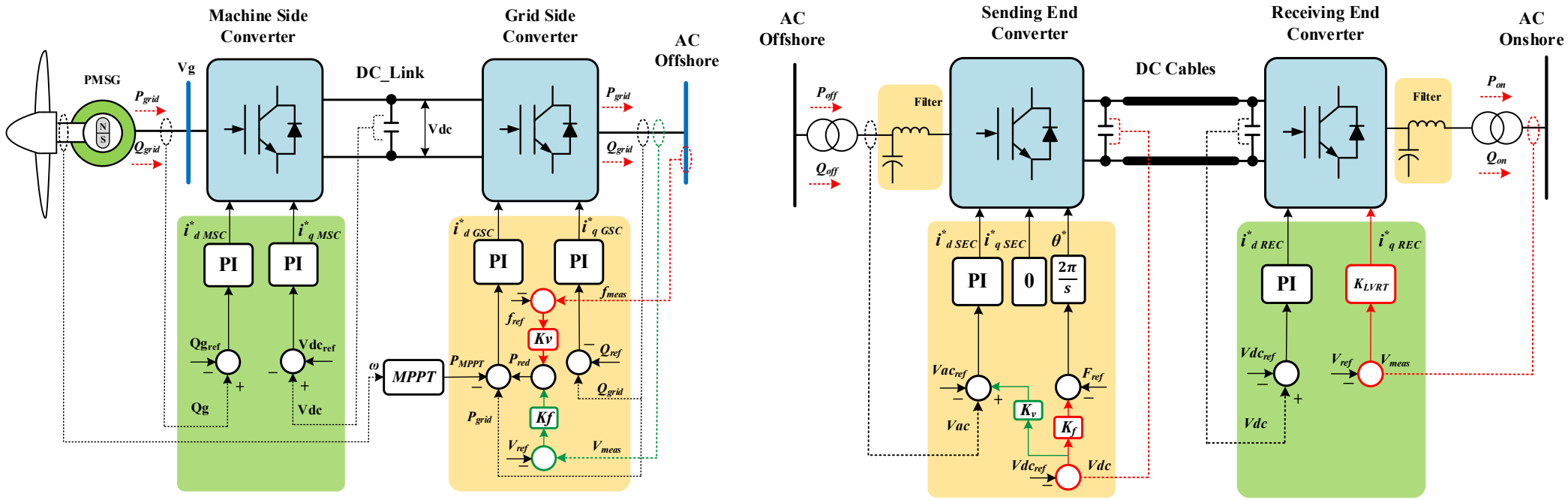

$$P_{red} = \left(V_{ref} - V_{meas}\right) * K_v \quad \textbf{(2)}$$

$$P_{red} = \left(f_{ref} - f_{meas}\right) * K_f \quad \textbf{(2)'}$$

$$P_{ref} = P_{MPPT} - P_{red} \quad \textbf{(3)}$$

$$f_{off}^{*} = f_{off0} + K_v\left(V_{dcoff} - V_{dc0}\right) \quad \textbf{(1)}$$

$$V_{off}^{*} = V_{off0} - K_v\left(V_{dcoff} - V_{dc0}\right) \quad \textbf{(1)'}$$

$$I_{qREC}^{*} = \begin{cases} flt = 1 & K_{LVRT}\left(V_{ref} - V_{meas}\right) \\ flt = 0 & 0 \end{cases} \quad \textbf{(4)}$$

Active Power Recovery

(Without Ramp Rate)

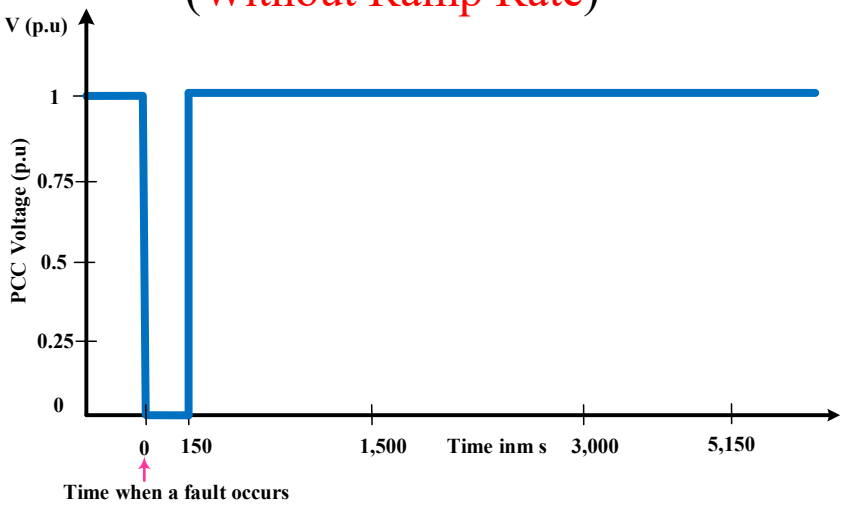

(With Ramp Rate)

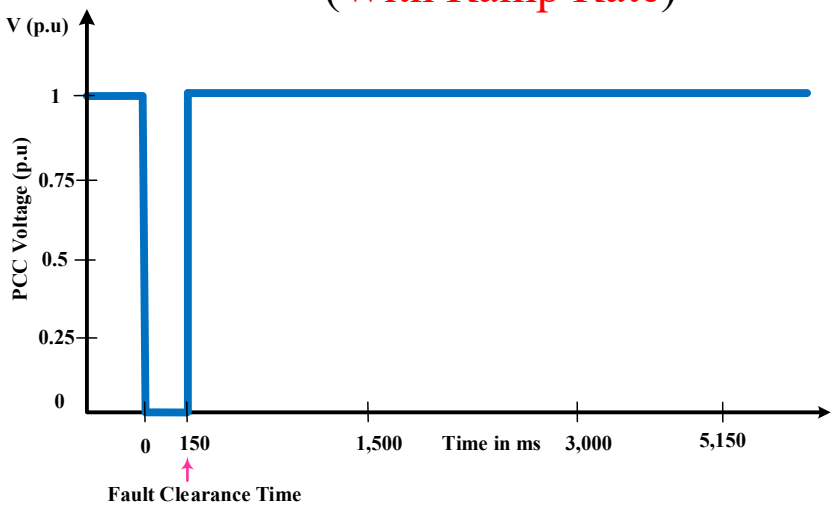

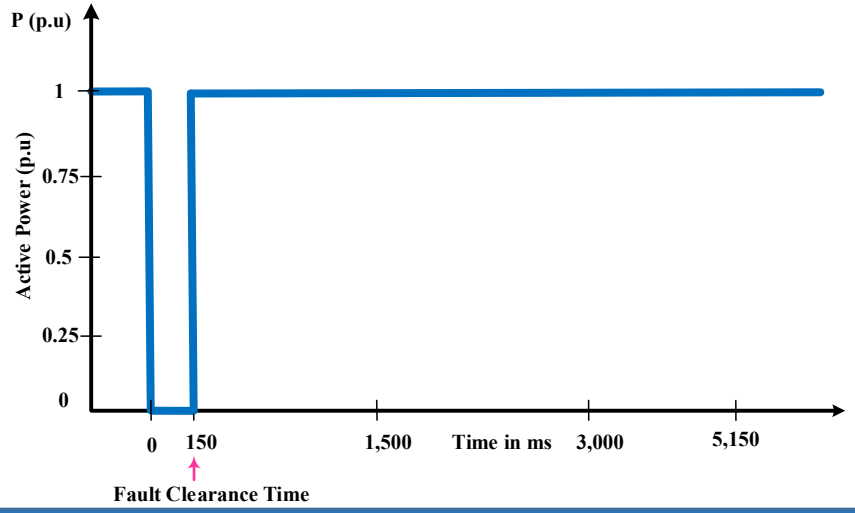

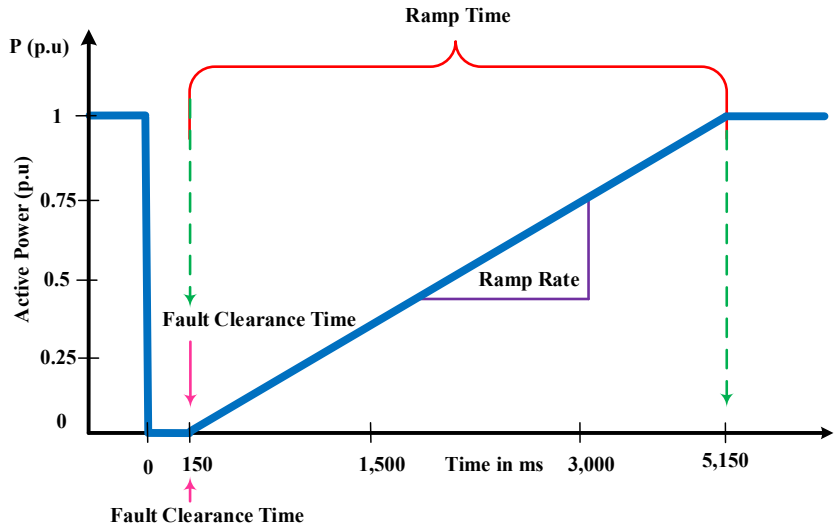

Modified Conventional LVRT Strategy

(With APR Ramp Rate)

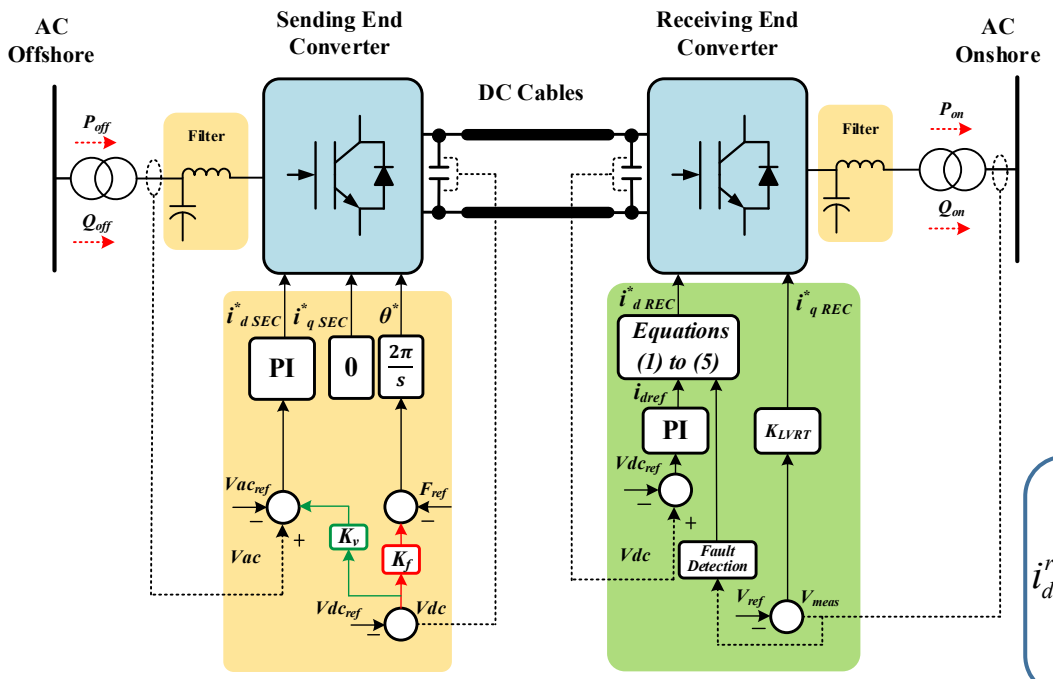

$$S_{ramp} = \begin{cases} 1 & \left(flt = 0 \;\; and \;\; i^*_{d\,REC} < i_{dref} \;\; and \;\; t_{ramp} < \dfrac{1}{R_{up}} \right) \\ 0 & \left(flt = 1 \; or \; i^*_{d\,REC} = i_{dref} \right) \end{cases} \quad (1)$$

$$\frac{di_d^{ramp}}{dt} = \lim \left(\frac{\left(i_{dref} - i_d^{ramp} \right)}{\Delta t}, \frac{\left(R_{down} - \dfrac{dV_{REC}}{dt} * i_d^{ramp} \right)}{V_{REC}}, \frac{\left(R_{up} - \dfrac{dV_{REC}}{dt} * i_d^{ramp} \right)}{V_{REC}} \right) \quad (2)$$

$$i_d^{ref} = \begin{cases} i_d^{ramp} & S_{ramp} = 1 \\ i_{dref} & S_{ramp} = 0 \end{cases} \quad (3)$$

$$i_{dmax} = \begin{cases} \sqrt{\left(i_{\max} \right)^2 - \left(i^*_{q\,REC} \right)^2} & V_{onshore} < 0.95 \\ i_{max} & V_{onshore} \geq 0.95 \end{cases} \quad (4)$$

$$i^*_{d\,REC} = \begin{cases} i_{dmax} & flt = 1 \\ i_d^{ref} & flt = 0 \end{cases} \quad (5)$$

$$i^*_{q\,REC} = \begin{cases} K_{LVRT} \left(V_{ref} - V_{onshore} \right) & flt = 1 \\ 0 & flt = 0 \end{cases} \quad (6)$$

Results and Discussion

Results and Discussion

Test Case I

3-ϕ Fault with 70 % voltage dip for 500 milliseconds, and wind generation (penetration level of 33%)

Ramp Rate	f_{Nadir} (Hz)	RoCoF (Hz/s)	τ_{Nadir} (p.u)	RoCoT (p.u/s)	$\omega_{turbine}$ (p.u)
0.2 p.u /s	49.43	-0.88	0.46	0.27	1.075
0.5 p.u /s	49.69	-0.55	0.58	0.41	1.0378
1 p.u /s	49.87	-0.38	0.63	0.39	1.0275
2 p.u /s	49.92	-0.27	0.644	0.38	1.0235

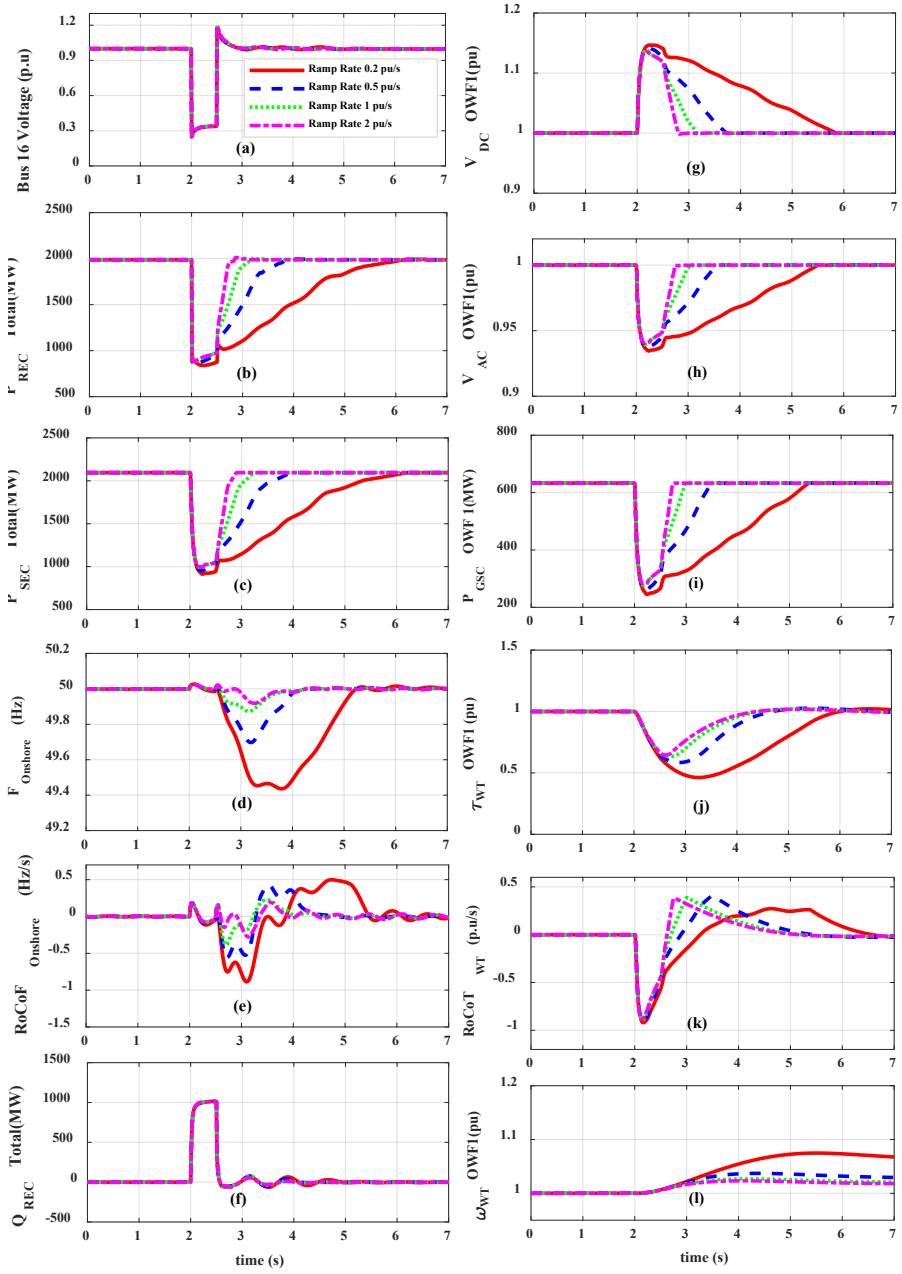

Results and Discussion

Test Case II

3-ϕ Fault with 100 % voltage dip for 150 milliseconds, and wind generation (penetration level of 46%)

Ramp Rate	f_{Nadir} (Hz)	RoCoF (Hz/s)	τ_{Nadir} (p.u)	RoCoT (p.u/s)	$\omega_{turbine}$ (p.u)
0.2 p.u /s	48.9	-1.85	0.33	0.243	1.1
0.5 p.u /s	49.4	-1.7	0.465	0.49	1.05
1 p.u /s	49.7	-1.48	0.57	0.45	1.03
2 p.u /s	49.9	-1.17	0.67	0.35	1.022

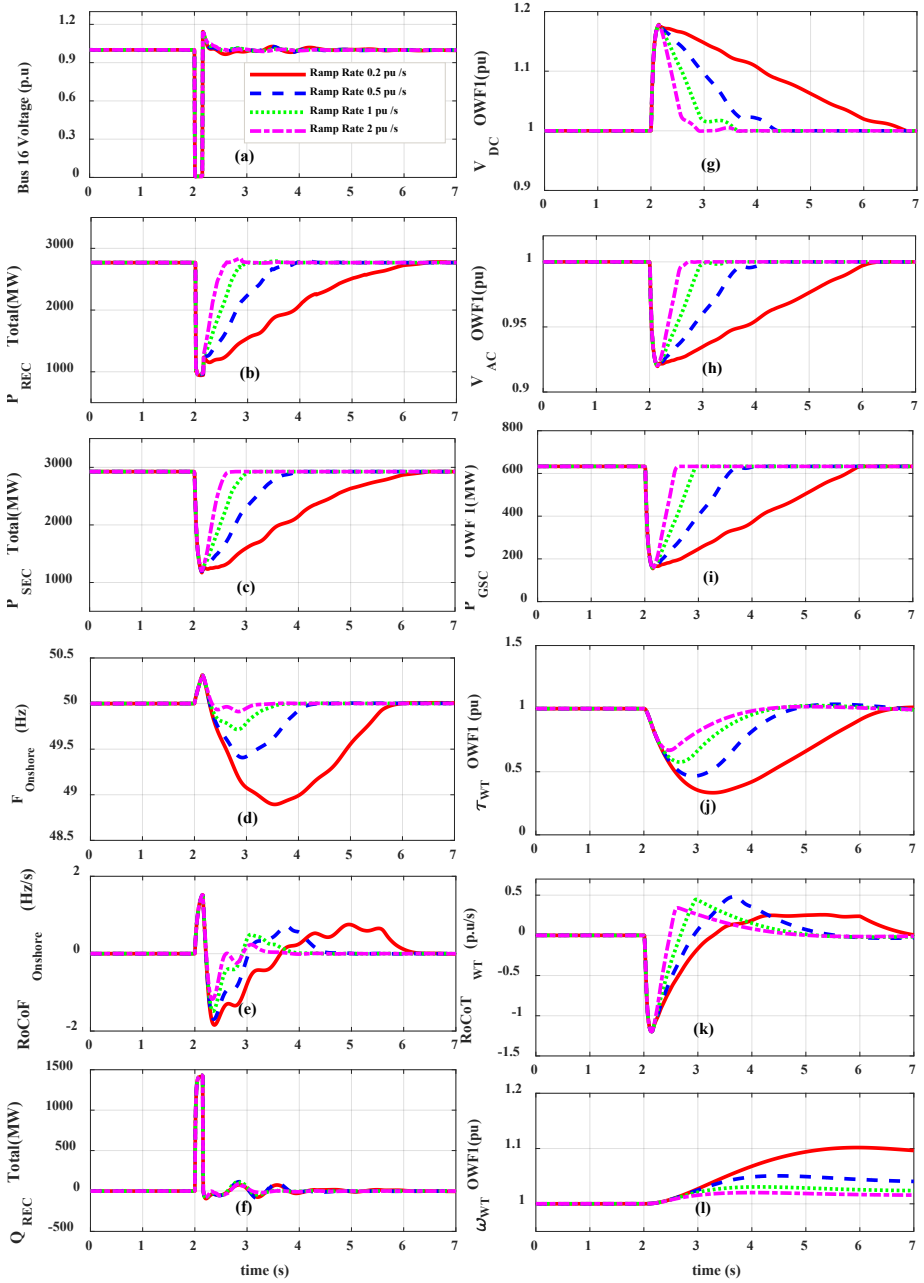

Test Case I
(70 % voltage dip for 500 milliseconds)
(penetration level of 33%)

Ramp Rate	f_{Nadir} (Hz)	RoCoF (Hz/s)	τ_{Nadir} (p.u)	RoCoT (p.u/s)	$\omega_{turbine}$ (p.u)
0.2 p.u /s	49.43	-0.88	0.46	0.27	1.075
0.5 p.u /s	49.69	-0.55	0.58	0.41	1.0378
1 p.u /s	49.87	-0.38	0.63	0.39	1.0275
2 p.u /s	49.92	-0.27	0.644	0.38	1.0235

Test Case II
(100 % voltage dip for 150 milliseconds)
(penetration level of 48%)

Ramp Rate	f_{Nadir} (Hz)	RoCoF (Hz/s)	τ_{Nadir} (p.u)	RoCoT (p.u/s)	$\omega_{turbine}$ (p.u)
0.2 p.u /s	48.9	-1.85	0.33	0.243	1.1
0.5 p.u /s	49.4	-1.7	0.465	0.49	1.05
1 p.u /s	49.7	-1.48	0.57	0.45	1.03
2 p.u /s	49.9	-1.17	0.67	0.35	1.022

Conclusion

- The results suggest that the VDIF is significantly improved by increasing APR ramp rates.
- With increasing the APR ramp rate the RoCoT is increased, however the WTG rotational speed decreased.
- The WTG mechanical stress decreased slightly at high APR ramp rates.
- The wind generation penetration levels and grid fault severity may significantly impact frequency stability of onshore main grid.

Thank you