Functional requirements for Blackstart & Power system Restoration from Wind Power Plants

Anubhav Jain

PhD:

Blackstart & Islanding capabilities of Offshore Wind Power Plants

Supervisors:

Dr. Jayachandra N. Sakamuri, Dr. Ömer Göksu

& Dr. Nicolaos A. Cutululis

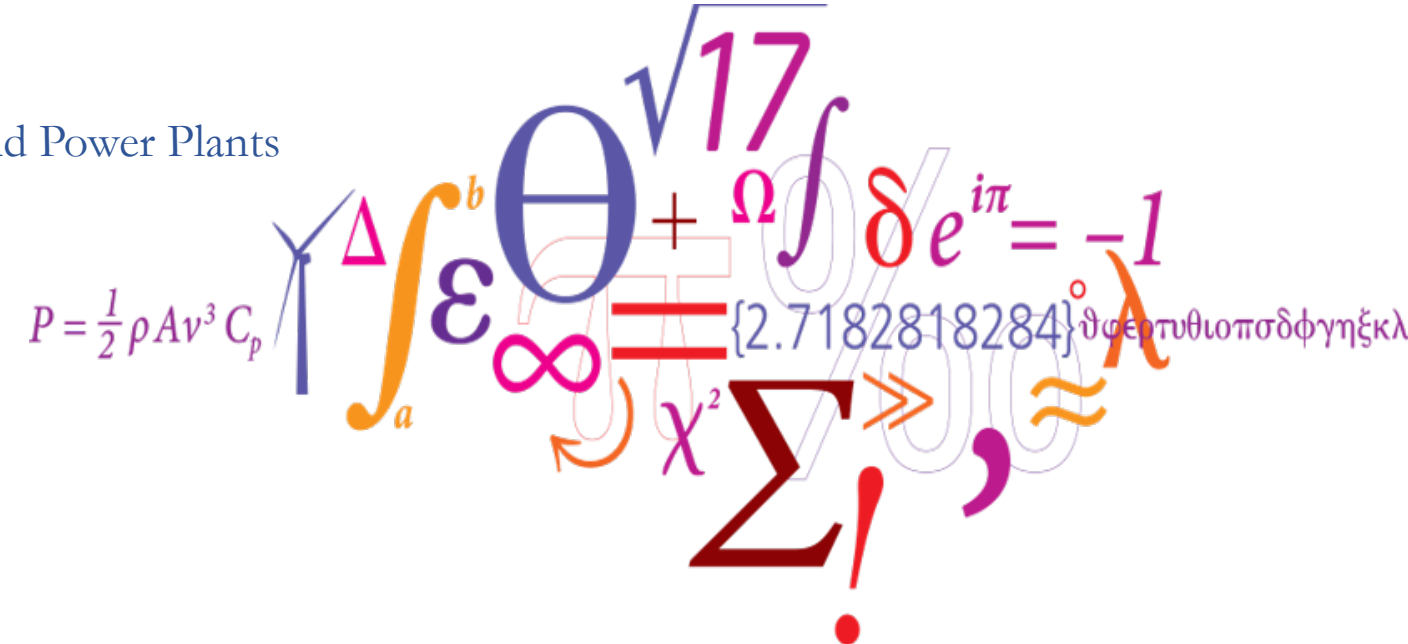

DTU Wind Energy

Department of Wind Energy

Blackout Impact

Blackout is *HILP* event

Year	*Location (Region)*	*Impact* *People-affected (million), or Length (billion customer-hours)*
1999	Brazil (S)	97
2001	India (N)	230
2003	US+Canada (NE)	55
2006	EU	15
2012	India (N,E,NE)	670 (largest in history)
2013	Philippines	6.3 (longest)
2016	Australia (S)	1.7
2019	Venezuela	30, >3.1

Motivation

Increased risk of wide-area blackouts [1,2]

High volume integration of RES far from loads
Increased trans-national power exchanges } *Operation closer to dynamic stability limit*
Power electronics converter (PEC) interface
Stronger network linking

Large OWPPs with modern WTs can address Blackstart requirements targeted conventionally to large thermal plants: ENTSO-E codes

Steady winds far-from-shore, thus *lesser availability-uncertainty*
Fast, fully-controlled, high-power environment-friendly BS capability of VSC-HVDC OWPP
Advanced V,f control functionalities from state-of-art PE interface of modern WTs

$P(\text{black-out} \mid \text{no-wind}) \rightarrow \text{LOW}$

Grid forming WT,WPPs [3]

Reduce the overall *impact* of a blackout event
Minimize or totally avoid use of *backup diesel generator* for auxiliary power, thus cost benefits
No wait for completion of network reconstruction; *controlled islanding* to ensure continuity of power supply
Allow DRU / LCC-with-smaller-filter, thus reduce costs, increase efficiency & reliability

Power System Restoration

Combined zonal-backbone restoration

Preparation

- *To save generation & ensure no accidental energization of faulted devices during PSR plan.*
- Decision: Assessment of post-blackout status of system.
- Defense: Plan suitable Sectionalizing Strategy.
- Definition: Plan suitable BSUs & Restoration path; Avoid re-blackout.

Critical for PSR

System Energization

- *To energize auxiliaries of non-BSUs & restore bulk transmission network.*
- Blackstart: pre-determined BSU(s) startup & operation, Non-BSU crank-up, Houseload.
- V-propagation: Zonal – Backbone (skeleton) energization, HV lines (Cap MVars)
- Load recovery: Priority & closest loads, Islanding.

Stabilize V, f

Load Restoration

- *To minimize un-served load, while satisfying system's operational constraints.*
- Block Loading: Max. size to avoid UF, & UV in weak grids.
- Meshing: Enhance resilience.
- Synchronization: Re-connect islands when stable.

Stable & Robust Load Recovery

BS Service Provider

- Tasks
  - Start-up *independent* of external supplies.
  - Energize transmission/distribution network.
  - Provide block loading of demand, in a *stable* power island.
  - Crank-up other *non-BS* PGMs. ← *Optional*
- Assets
- Present
- Future

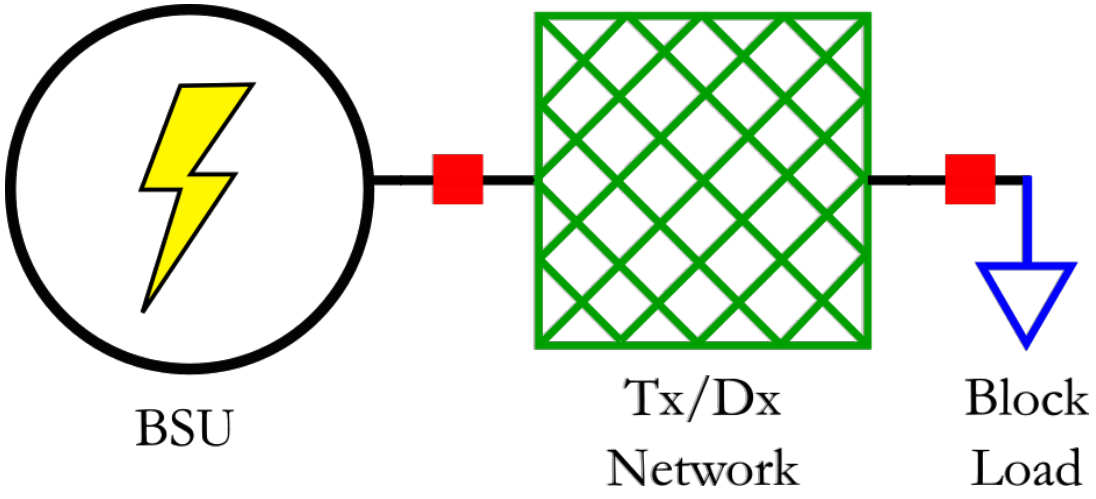

BS Service Provider

- Tasks
- Assets
  - Self-starter eg. Diesel, BESS.
  - Cranking path *(optional)*
  - Main PGM(s)
- Present
- Future

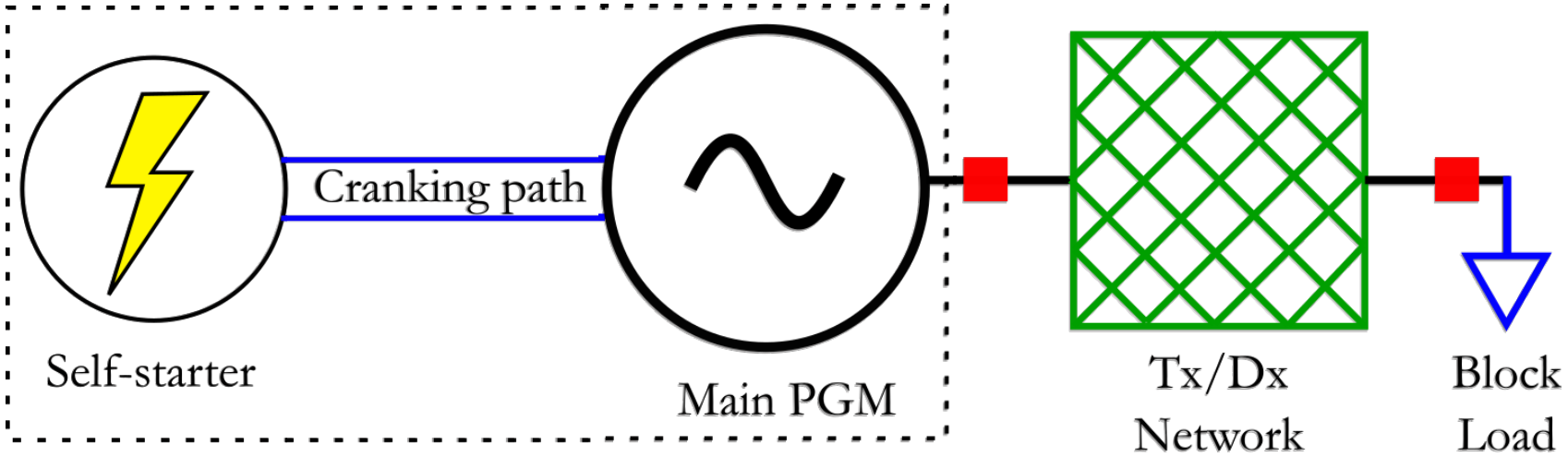

BS Service Provider

- Tasks
- Assets
- Present – *large thermal plants cranked up by*
  - Pump-storage Hydro
  - Gas-fired
  - HVDC eg. DK-NO, IR-GB. ← *Top-bottom PSR*
  - ~~Nuclear~~ – *security*
  - Diesel, for OWPPs ← *BS ~~by~~ of OWPP*
- Future – *alternate sources required* → *resilience*
  - *Changing* generation profile.
  - RES ↑ → SG running hours ↓
  - Large WPPs *can support* PSR [4,5], if not BS.
  - ESS can mitigate *intermittency* issues for PSR.

Comparison

System Energization

- Blackstart: Self-start, Fuel supply, Restoration time.
- V-propagation: Var-requirement, V-management.
- Load recovery: V, *f*-management

Load Restoration

- Block Loading: P-requirement.
- Islanding & TTH
- Synchronization

Technical Requirements for Blackstart Service	Technical Capabilities of Wind Turbines

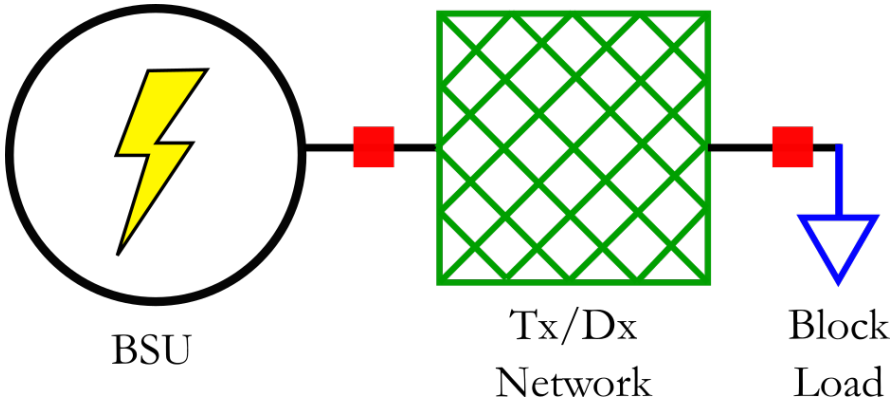

Codes vs. Wind

System Energization

- Blackstart: Self-start

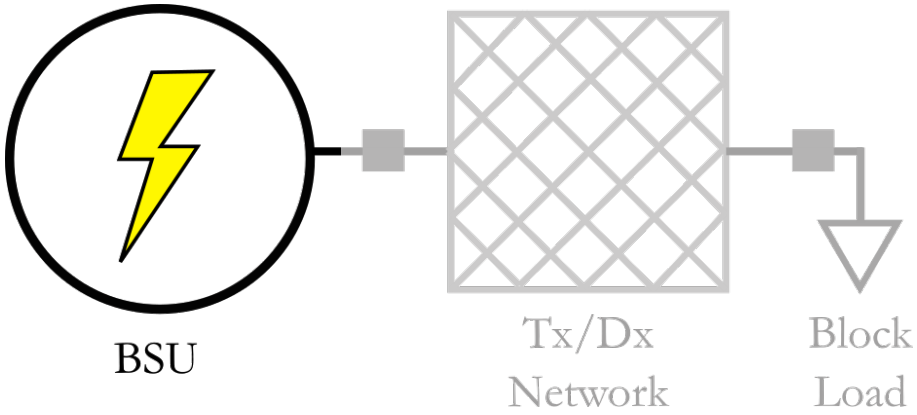

- Diesel gen.
- Gas-fired plants.
- Pumped-storage hydro.
- Stored E (BESS).

- Onshore – NO.
- Offshore – can BS & self-sustain aux.; NOT ready to re-energize cables.
- *Innovative solutions* → bright future: High *P-density* ESS at WTDC link & High *E-density* ESS at PoC.
- *Grid-following* WTs connecting in initial stages of PSR → re-blackout.

Grid-forming

Codes vs. Wind

System Energization

- Blackstart: Fuel supply

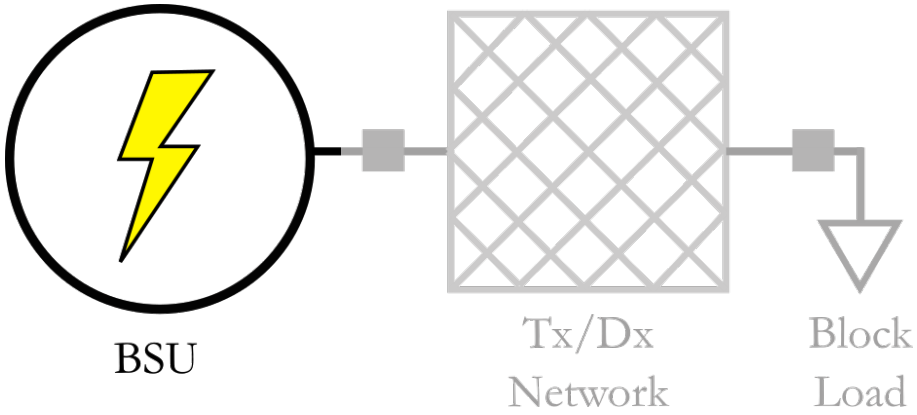

- 90% availability.
- Min. E (stored) for 3 sequential blackouts.
- Backup fuel supplies for 3-7 days.

- Aux. & Backup Diesel gen, on offshore platform.
- Large MW-scale OWPPs, further away from shore → steadier wind conditions → lower availability uncertainty.
- 10-20 *BS-able* WTs → reliability + cost benefits.

Grid-forming

Codes vs. Wind

System Energization

- Blackstart: Restoration time

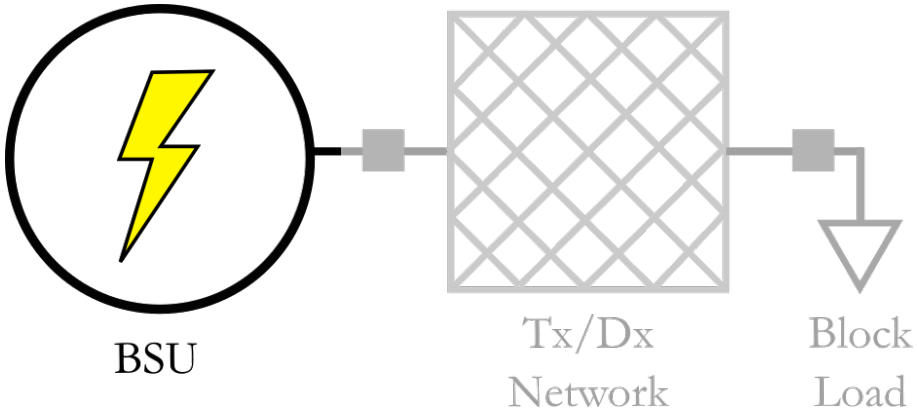

- Startup time – 20 min for thermal units, 5 min for hydraulic.
- BSU must operate for at least 24 hrs; not applicable to pump-storage hydro.

- Startup time – 40 sec.
- Similar relaxation can help develop BS-service technology in WPPs.

Codes vs. Wind

System Energization

- V-propagation: Var-requirement

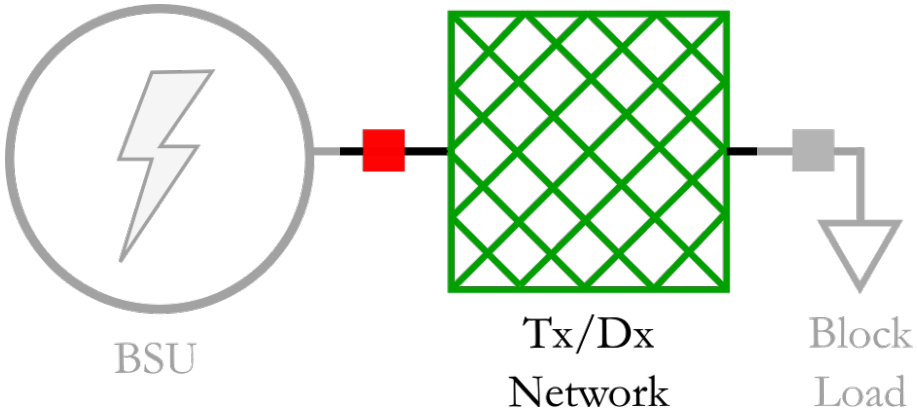

- BSU must absorb MVars generated by connection of overhead lines, low-loaded cables.

- V-instability due to insufficient Var reserve → major blackouts.
- FRT mode in WTs – support V-recovery at PoC. VRT, RCI in grid codes (DE, DK, IR, ES, UK).

Cable Vars

Codes vs. Wind

System Energization

- V-propagation: V-management

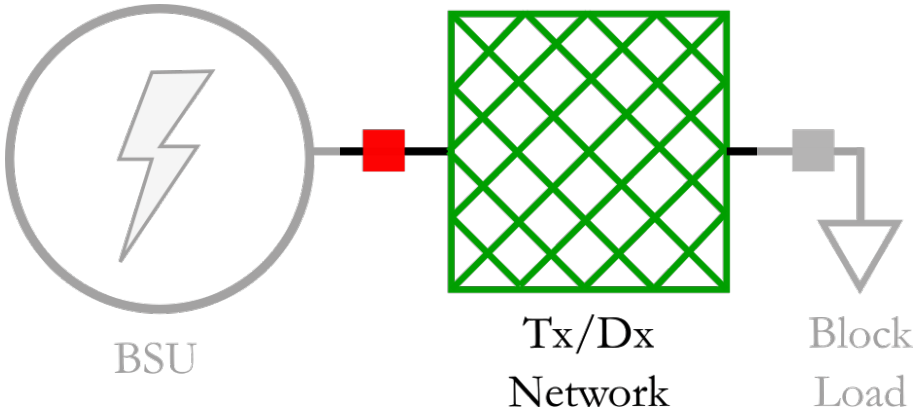

- Soft (LV) energization
  - Cable MVar
  - Trafo Inrush
  - PSR time
- Long HV lines with unloaded trafo at remote end → energization is critical as possible resonance → high OV.
- Feeder restoration such as to limit increment of MVars generated.

- PEC interface → advanced V-control & V-support functionalities like fast Var response.
- Local V-control requirement expected in future grid codes, esp. DE & ES.

Grid-forming

Codes vs. Wind

System Energization

- Load recovery: *f*-management

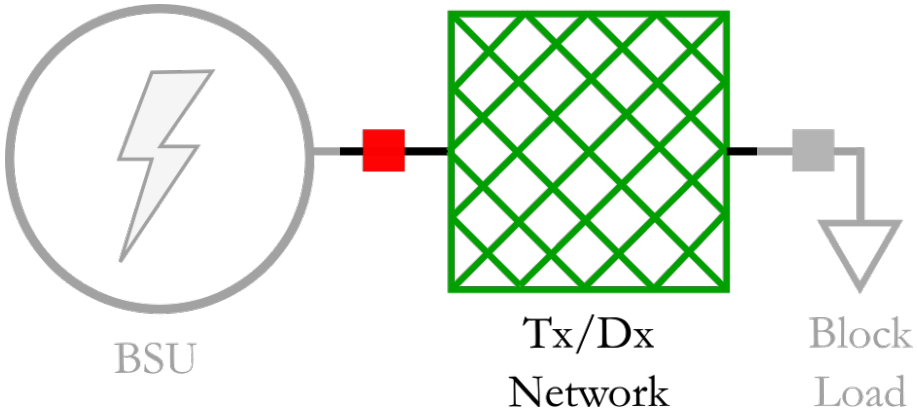

- LFSM-O/U operation & *f*-control during OF/UF.
- Initial load restoration – small steps; nearest loads first.
- Before load pickup, *f* min. 50 Hz (preferably higher).
- 1 isochronous control gen & others in droop set-point control.
- Upward reserve for *f*-instabilities, eg. 70% (Elia), 50% (EirGrid).

- PEC interface → fast (down-regulating) P-control → spinning reserve margin.
- FFR by using KE – reduces initial RoCoF, but doesn't support overall PSR.
- *J*-emulation & POD expected in future grid codes, esp. ES & DE.

Grid-forming & Power-Delta Control

Codes vs. Wind

Load Restoration

- Block Loading: P-requirement

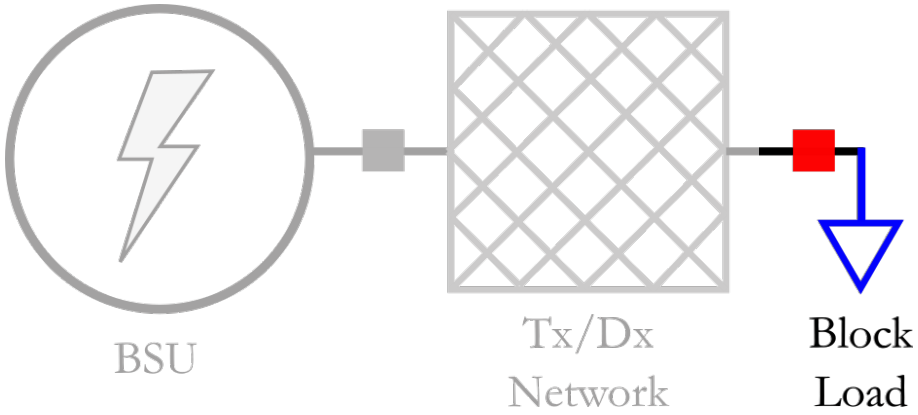

- 10 MW (Elia), 35-50 MW (UK).
- *f*-range: 49-52 Hz (Elia), 47.5-52 Hz (UK).
- V-range (Elia) [6]:

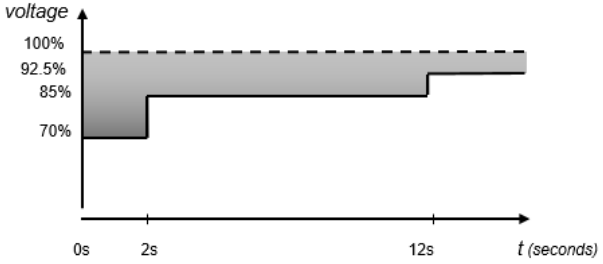

Goal: high priority loads, non-BSU aux. with available margin for fluctuations.

40 MW block load is only 10% of nominal power for a 400 MW WPP. Intermittency Risk.

Curtailment, Power-Delta control

Codes vs. Wind

Load Restoration

- Islanding & TTH
- Synchronization

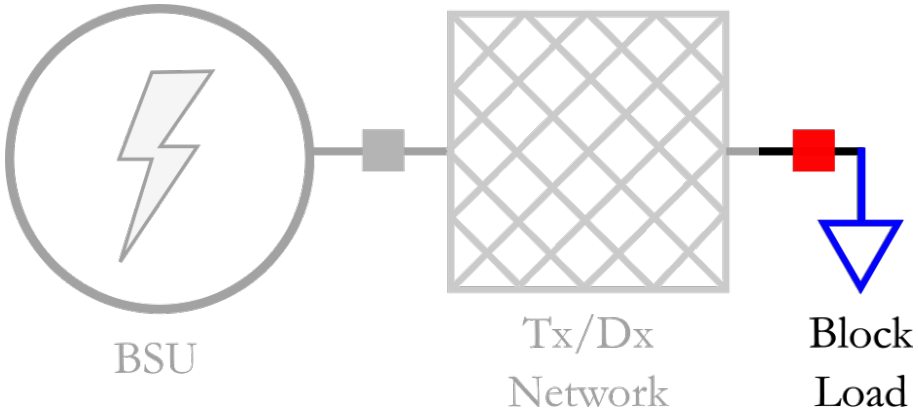

- Islands connected (synchronization) when stable.
- Parallel operation of BSU with other PGMs, in an island.
- PGM with TTH → speed up PSR as no restart needed.
- Tennet Grid Codes for Islanding & Houseload operation.
- Houseload operation NOT used in PSR, except FR.

- OWPPs TTH with islanding of offshore/ regional onshore zone → early stage PSR support & *f*-instability defence.

CIO

Bridging the Gap

- Grid-forming (BS-able) WTs [7]
  - Self-start
  - V, *f*-control
- Cable Vars
  - Array cables ✓
  - Onshore Export cable ✗
- Trafo transients
  - Inrush → V-dips
  - Overexcitation → transient busbar OV
  - Resonance with long HV lines → OV.
- CIO

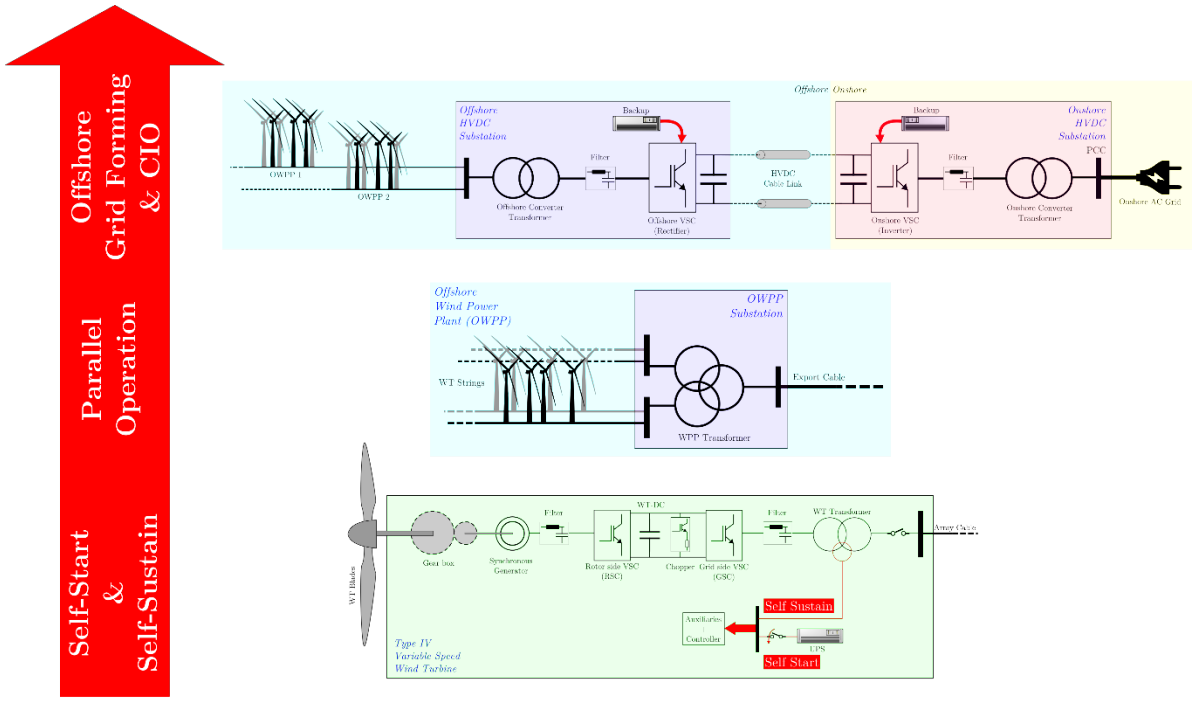

A. Jain, K. Das, Ö. Göksu, and N. A. Cutululis, "Control Solutions for Blackstart Capability and Islanding Operation of Offshore Wind Power Plants," in Proceedings of the 17th International Wind Integration workshop. Energynautics GmbH, 2018.

Initial Results [8]

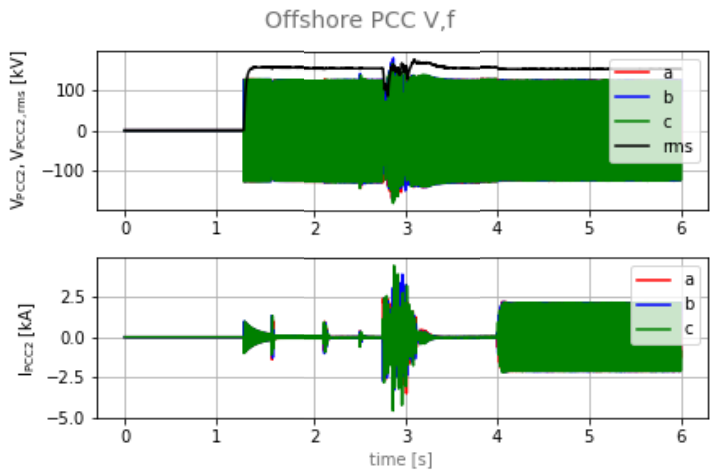

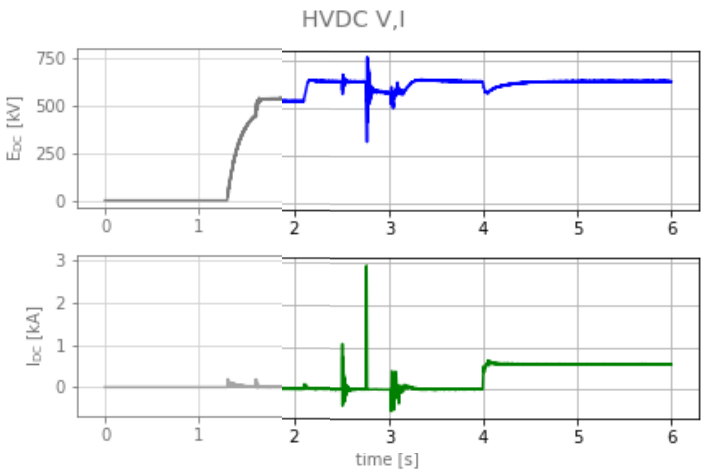

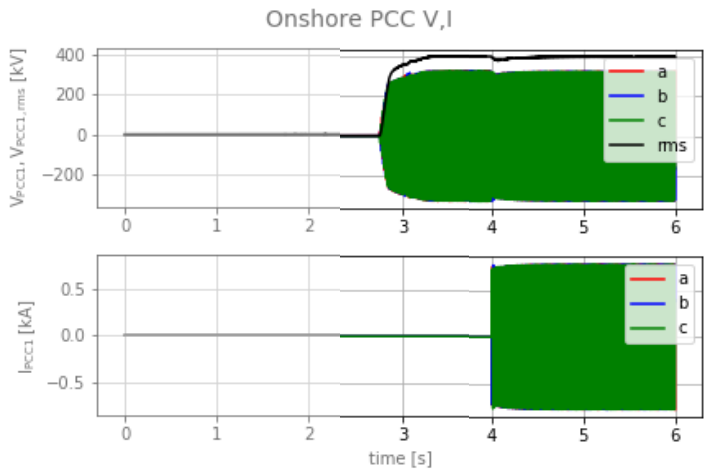

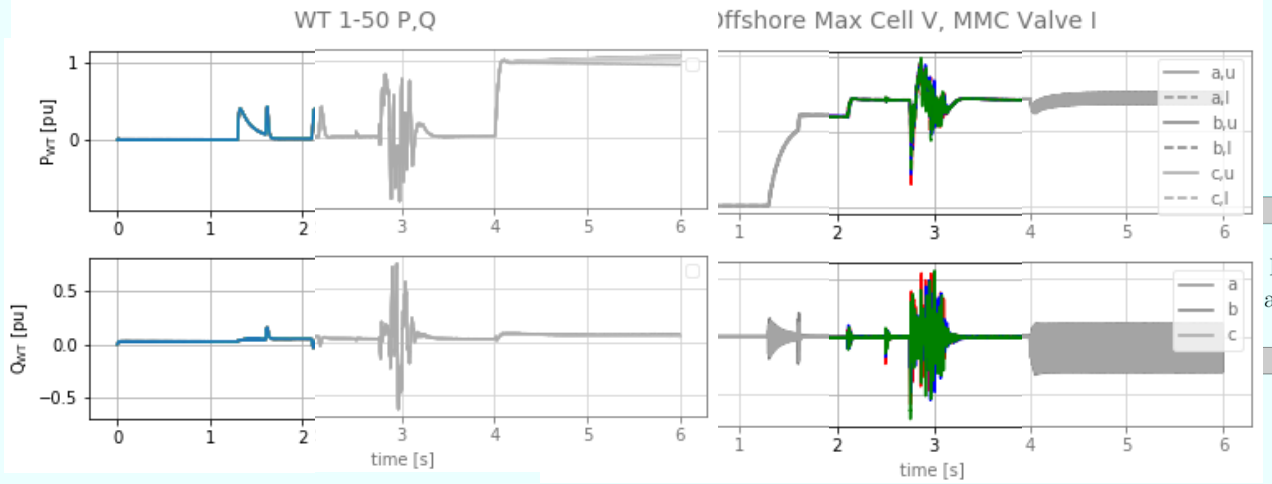

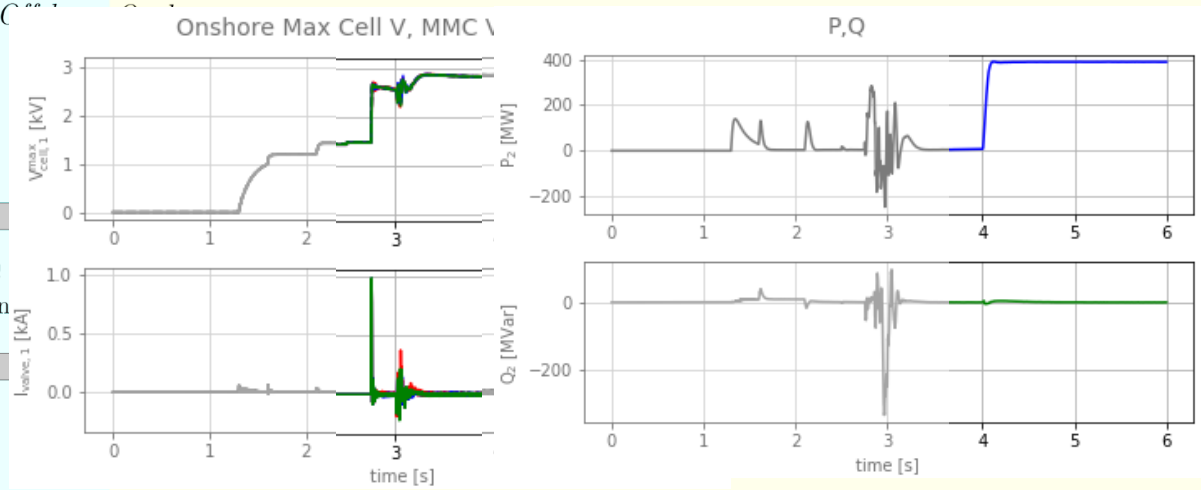

HVDC
able Lin

Considerations

- Grid codes: DK, DE, ES, UK, IR
  - PQ-control, V-support, FRT, J-response, P-quality, Protection.
  - Exempt from PSR services.
  - *Major driver* for WT technology (eg. RCI, VRT; J & POD).
  - *Ongoing dialogue* between TSO & Wind Industry.
- Case Study: 2016 South Australian Blackout (AEMO) ← *UCIO*
  - Protection settings – redesign required, especially in areas with high wind penetration.
  - CIO – practical measures for stable islanding required.
  - Wind intermittency & excessive speeds NOT material contributor to blackout.
  - Further investigation: WPP reduction during faults, WT over-speed cut-outs.
- WPP *early* in PSR:
  - BSU impact limited only to *first 4-6 hrs* of PSR.
  - Option for DK, DE, ES ← *more familiarity* with high wind share.

THANK YOU

This presentation is part of the InnoDC project that has received funding from the European Union's Horizon 2020 research and innovation programme under the Marie Sklodowska-Curie grant agreement no. 765585

Target State 1

- *Housekeeping* – internal UPS / BESS [9]
- Grid forming [7] GSC + RSC
- Down-regulation: Power-curtailment / Idling modes

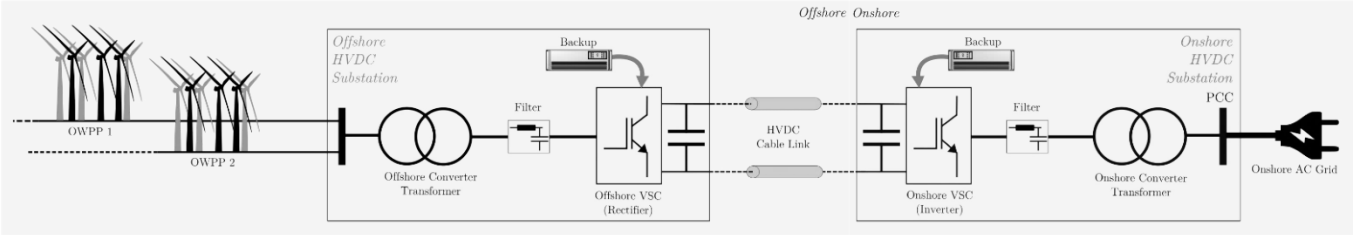

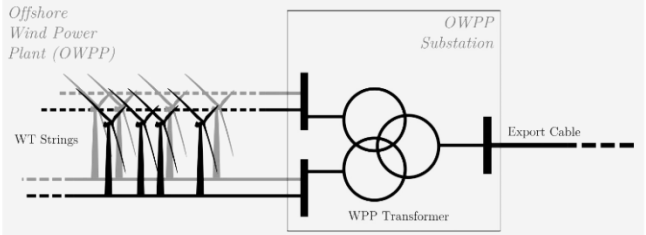

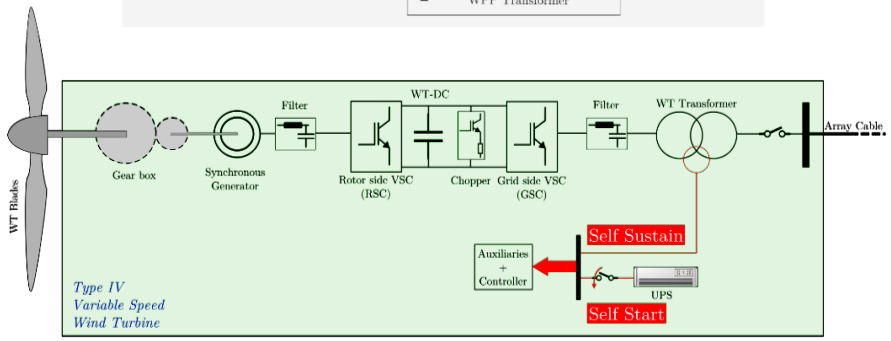

Target State 2

- Voltage controlled island – 3-level μGrid control [10] + MMO [11]
- Grid-formers : Grid-followers
- STATCOM mode – VAR compensation [12]
- Intelligent control-mode switching [11]

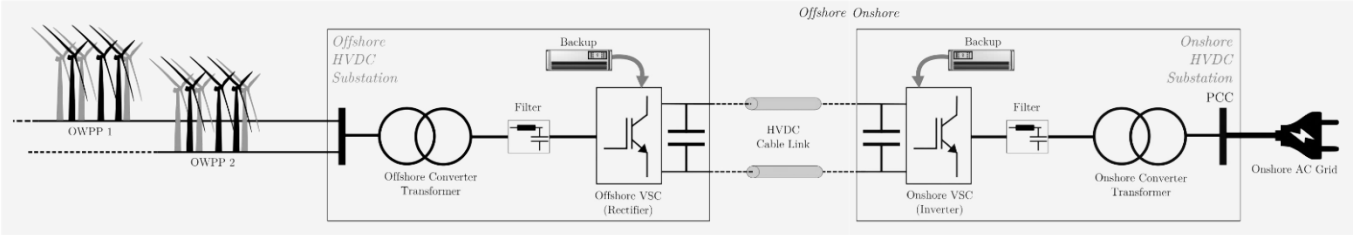

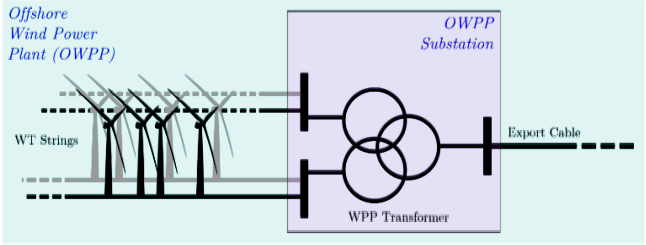

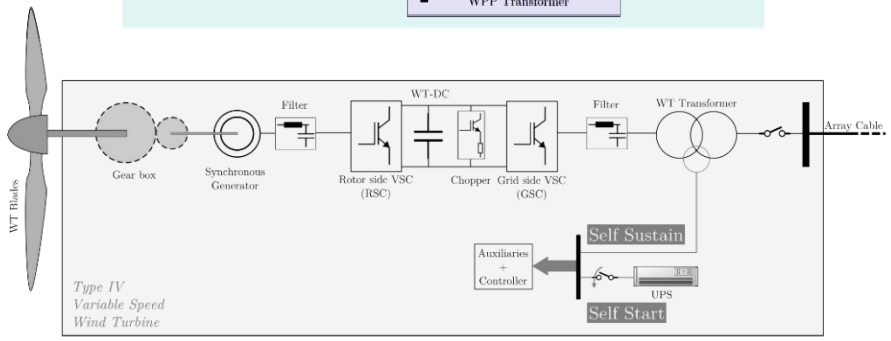

DTU Wind Energy
Department of Wind Energy

Target State 3

- *Stiff, controlled* Voltage source – WPPs coordinated parallel operation
- **C**ontrolled **I**slanded **O**peration: stability & robustness
  - Offshore & DC grid faults
  - Harmonic instabilities [13]
  - HVDC link resonance issues [14]
  - Substantial network configuration changes [15] eg. load pickups, WT connections/disconnections

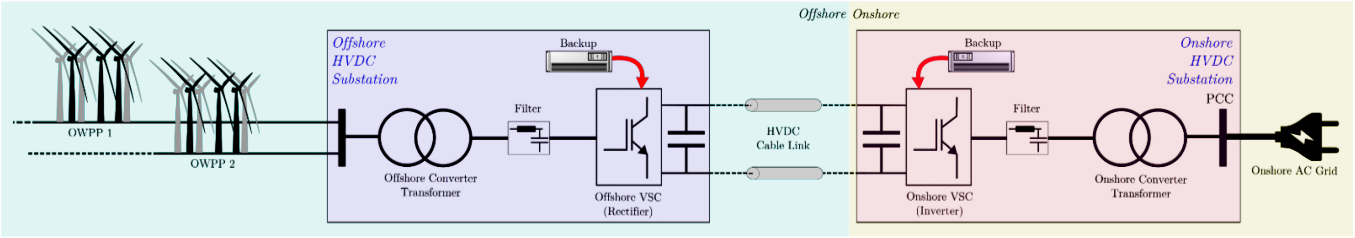

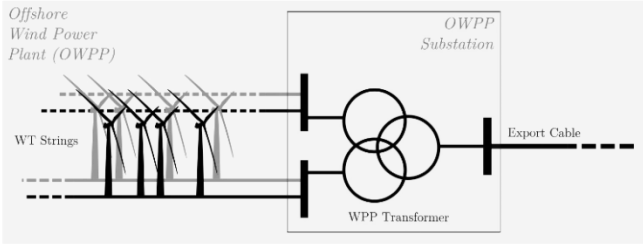

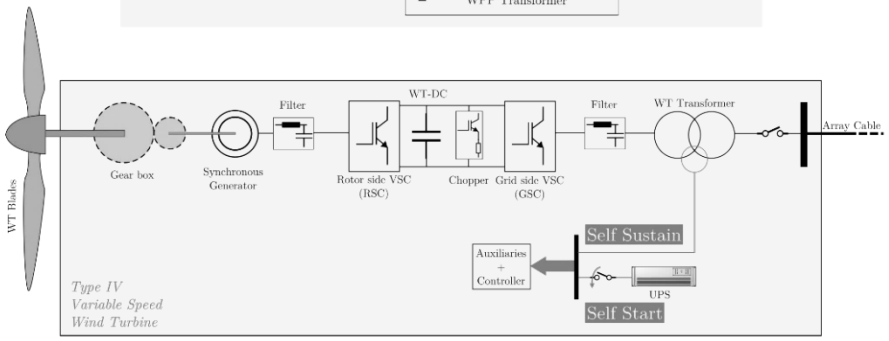

DTU Wind Energy
Department of Wind Energy

Grid forming WT [7]

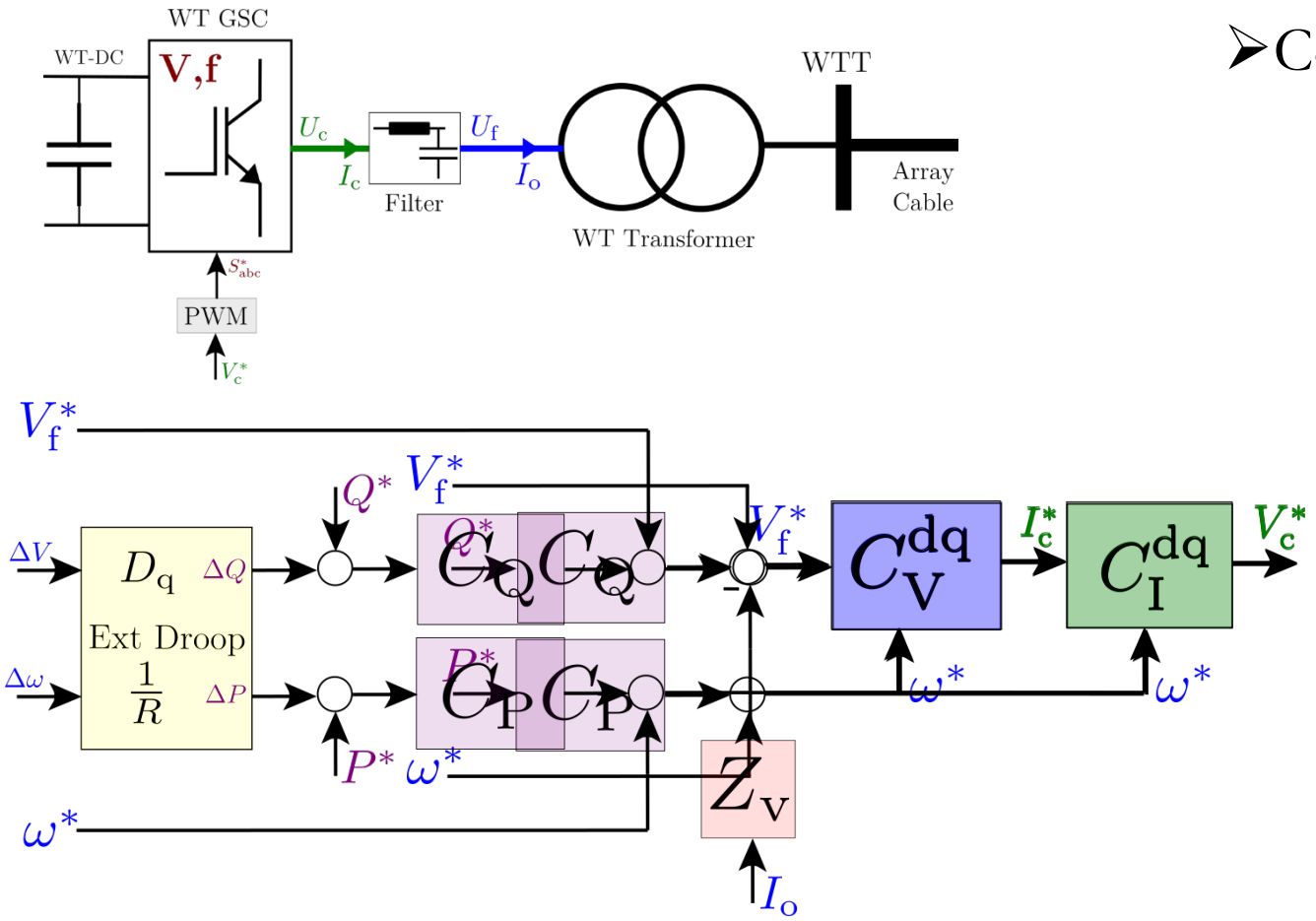

- Controls V,f at WTT
  - Inner loops - dq
    - Ci: limit current during transients/faults.
    - Cv: control WTT V
  - Outer loops – Droop=VSM(v J,D)/PI/LL
    - Cq: QLC
    - Cp: PLC
  - Additions
    - Ext f-P droop (~R in SG)
    - Ext Q-V droop (~AVR in SG)
    - Virtual impedance (single/multiple *f*) to damp inrush/OC/harmonics.

VSG [16]

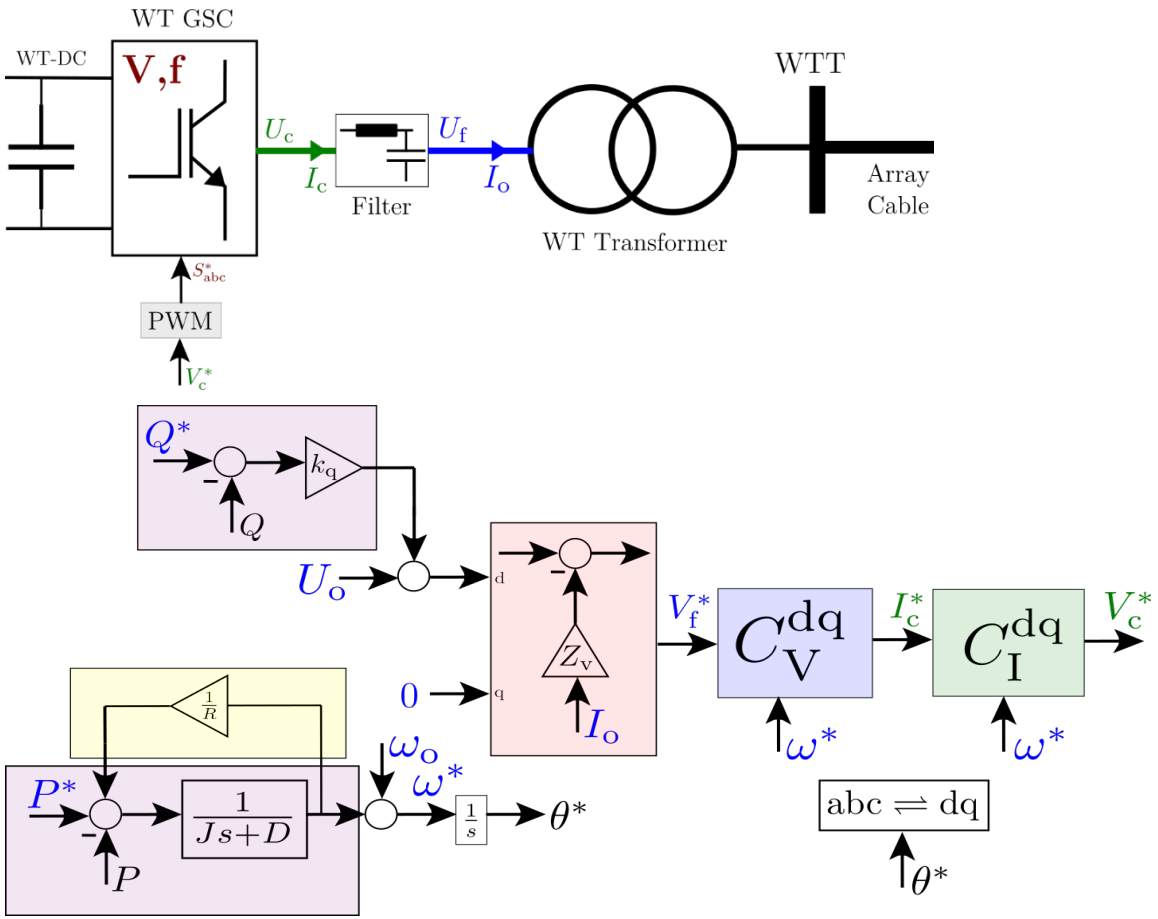

- Q-V & P-f (~SM)
- QLC: Q-V droop
- PLC:
  - VSM (virtual J, D)
- Addition [17]:
  - Ext *f-P* droop
  - Virtual admittance
  - ~~Active damping~~

PSC [18]

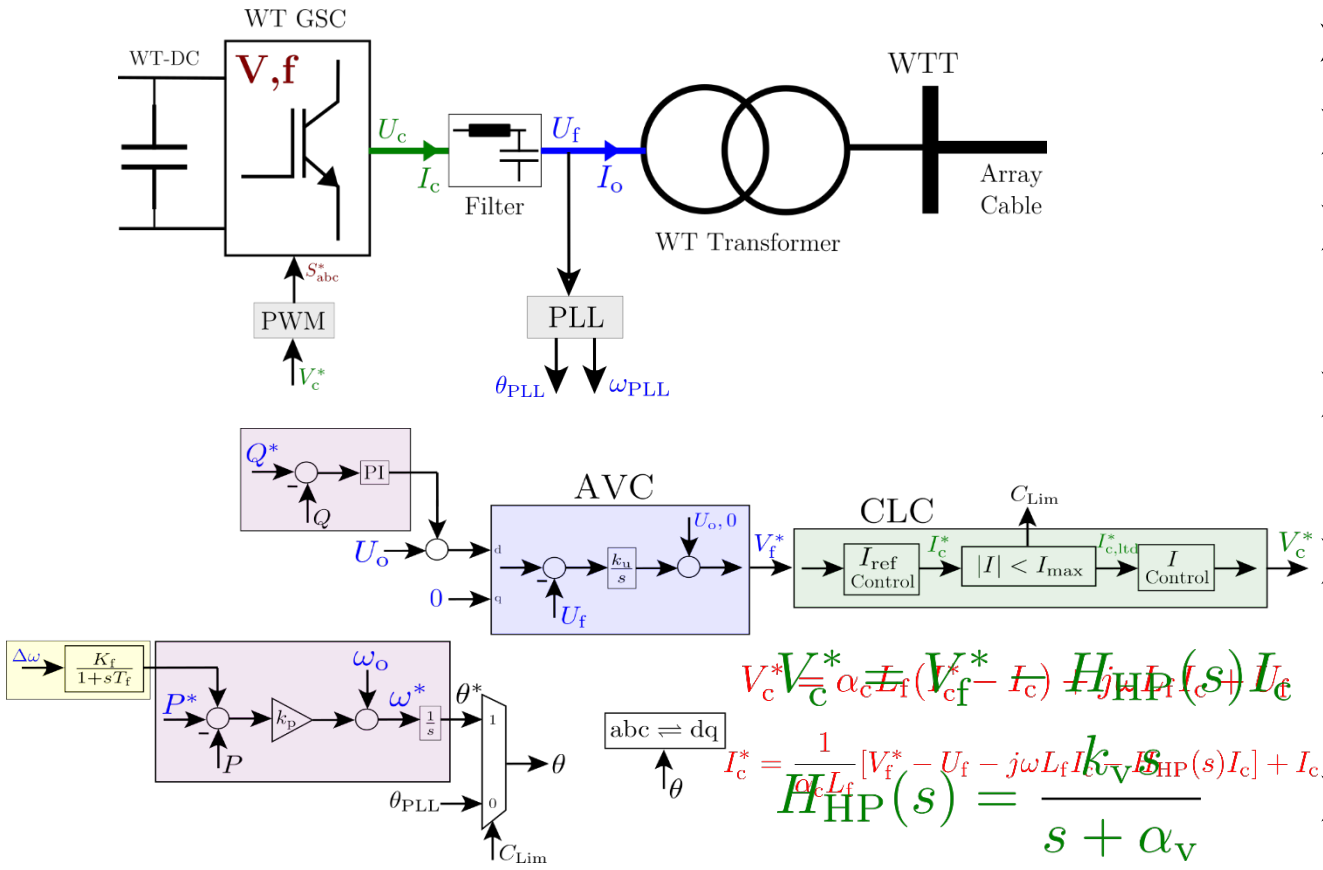

$$V^*_c = \alpha_c L_f (V^*_f - I_c) + H_{HP}(s) I_c$$

$$I^*_c = \frac{1}{\alpha_c L_f}[V^*_f - U_f - j\omega L_f I_c - H_{HP}(s) I_c] + I_c$$

$$H_{HP}(s) = \frac{k_v s}{s + \alpha_v}$$

- Q-V & P-f (~SM)
- QLC: PI (optional)
- PLC: P
  - Ext f-P droop
- AVC: (~ SM exciter, but I & not P)
  - Reqd for weak grids/islands
- CLC:
  - Normal mode: ~active damping (HF:R)
  - Faults: OC limit & switch to PLL
- Proven response for weak grids.

DPC [19]

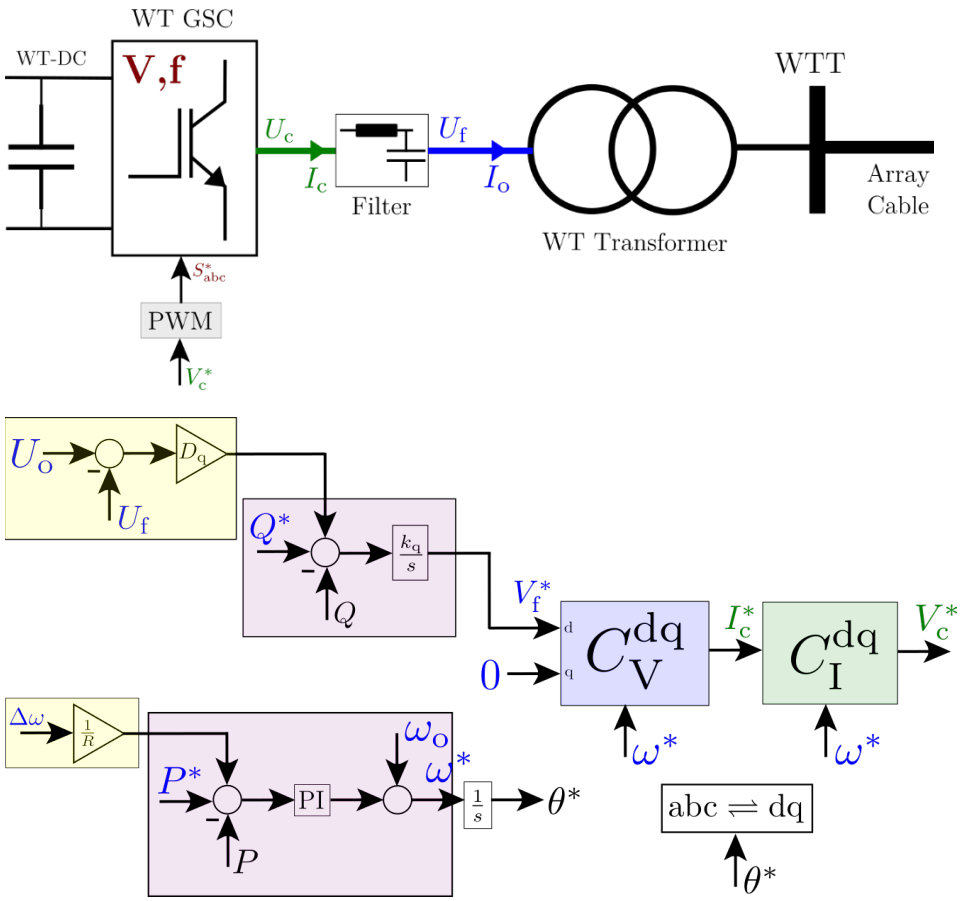

- Q-V & P-f (~SM)
- QLC: I
- PLC: PI
- Addition:
  - Ext V-Q droop
  - Ext f-P droop
- ~~Faults: current limitation ~ PSC~~

Distributed PLL [20]

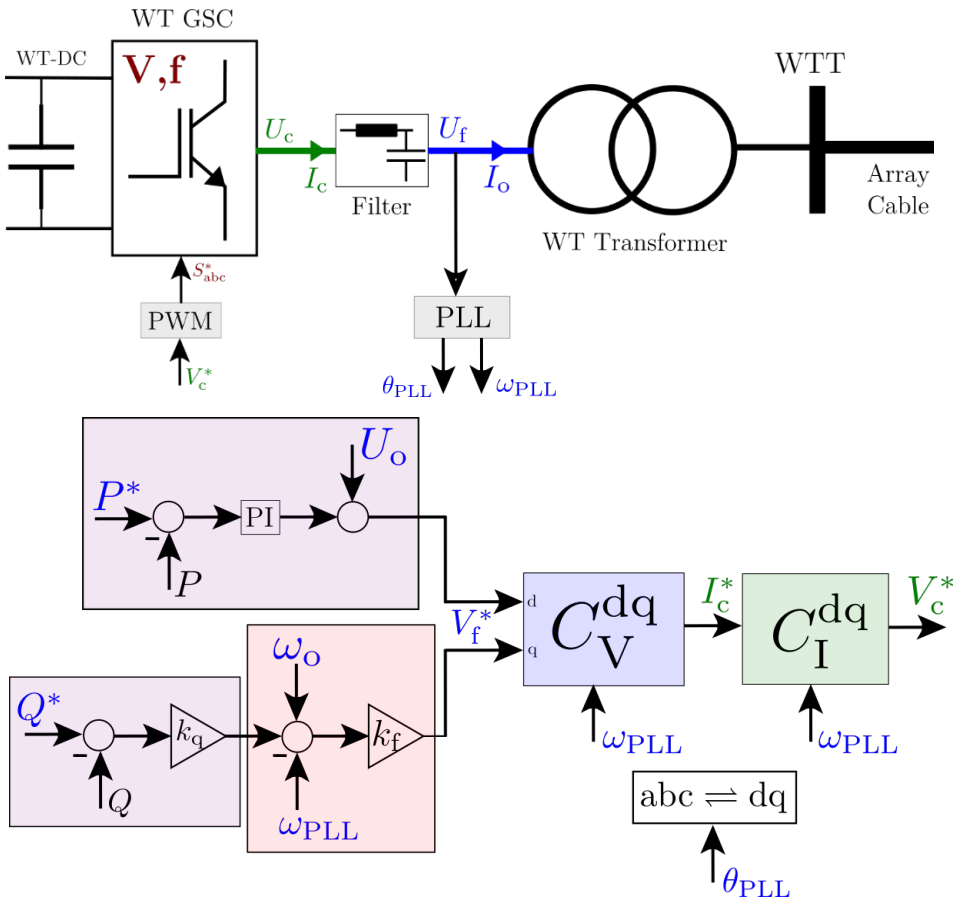

- PLC: PI (d-axis)
- QLC: P (q-axis)
- Addition:
  - PLL based fLC:

$$V_{fq} > 0 \Rightarrow f > f_0$$

Thus, $V^*_{fq} = k_f(f_{ref} - f)$

Comparison

1. Distributed PLL
2. VSG
3. DPC
4. PSC

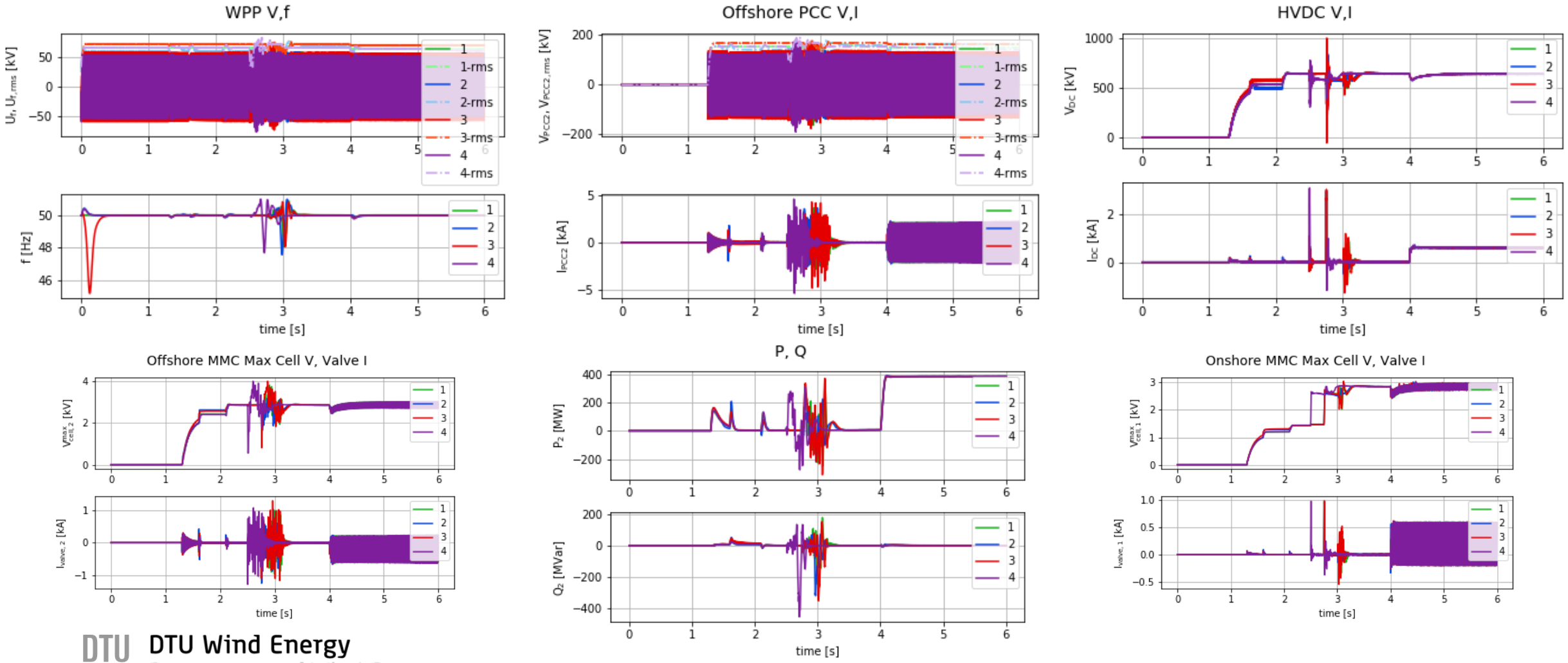

DTU Wind Energy
Department of Wind Energy

References

[1] S. De Boeck, D. Van Hertem, K. Das, P. E. Sørensen, V. Trovato, J. Turunen, and M. Halat, "Review of Defence Plans in Europe: Current Status, Strengths and Opportunities," CIGRE Transactions on Science & Engineering, vol. 5, pp. 6–16, June 2016.

[2] M. N. I. Sarkar, L. G. Meegahapola, and M. Datta, "Reactive Power Management in Renewable Rich Power Grids: A Review of Grid-Codes, Renewable Generators, Support Devices, Control Strategies and Optimization Algorithms," IEEE Access, vol. 6, pp. 41 458–41 489, 2018.

[3] Anubhav Jain, Kaushik Das, O¨ mer Go¨ksu, and Nicolaos A. Cutululis, "Control Solutions for Blackstart Capability and Islanding Operation of Offshore Wind Power Plants," in Proceedings of the 17th International Wind Integration workshop. Energynautics GmbH, 2018.

[4] A. El-Zonkoly, "Integration of wind power for optimal power system black-start restoration," Turkish Journal of Electrical Engineering & Computer Sciences, vol. 23, no. 6, pp. 1853–1866, 2015.

[5] National Grid Electricity Transmission PLC, "Black Start Service Description," 2012, Accessed on 12-03-2019. [Online]. Available: https://www.nationalgrideso.com/balancing-services/system-security-services/black-start

[6] Elia - Market Development, "Design Note on Restoration Services," 2018.

[7] J. Rocabert, A. Luna, F. Blaabjerg, and P. Rodriguez, "Control of Power Converters in AC Microgrids," IEEE Transactions on Power Electronics, vol. 27, no. 11, pp. 4734–4749, 2012.

[8] J. N. Sakamuri, Ö. Göksu, A. Bidadfar, O. Saborío-Romano, A. Jain, and N. A. Cutululis, "Black Start by HVdc-connected Offshore Wind Power Plants," in IECON 2019 - 45th Annual Conference of the IEEE Industrial Electronics Society, Lisbon, 2019.

[9] R. Teichmann, L. Li, C. Wang, and W. Yang, "Method, apparatus and computer program product for wind turbine start-up and operation without grid power," United States Patent US 7,394,166 B2, Oct 2006. [Online]. Available: https://patents.google.com/patent/US7394166B2/en

[10] J. M. Guerrero, J. C. Vasquez, J. Matas, L. G. De Vicu˜na, and M. Castilla, "Hierarchical control of droop-controlled AC and DC microgrids - A general approach toward standardization," IEEE Transactions on Industrial Electronics, vol. 58, no. 1, pp. 158–172, 2011.

References

[11] J. Lopes, C. Moreira, and A. Madureira, "Defining Control Strategies for MicroGrids Islanded operation," IEEE Transactions on Power Systems, vol. 21, no. 2, pp. 916–924, May 2006.

[12] B. Andersen and L. Xu, "Hybrid HVDC System for Power Transmission to Island Networks," IEEE Transactions on Power Delivery, vol. 19, no. 4, pp. 1884–1890, Oct 2004.

[13] X. Wang and F. Blaabjerg, "Harmonic Stability in Power Electronic Based Power Systems: Concept, Modeling, and Analysis," IEEE Transactions on Smart Grid, 2018, (Early Access).

[14] N. A. Cutululis, L. Zeni, A. G. Endegnanew, G. Stamatiou, W. Z. El-Khatib, and N. Helistö, "OffshoreDC DC grids for integration of large scale wind power," DTU Wind Energy Report E-0124, 2016.

[15] Y. Jiang-Hafner and M. Manchen, "Stability enhancement and blackout prevention by VSC based HVDC," in CIGRE 2011 Bologna Symposium - the Electric Power System of the Future: Integrating Supergrids and Microgrids, Bologna, 2011.

[16] S. D'Arco and J. A. Suul, "Virtual synchronous machines - Classification of implementations and analysis of equivalence to droop controllers for microgrids," in *2013 IEEE PES PowerTech*, 2013, no. June.

[17] S. D'Arco, J. A. Suul, and O. B. Fosso, "A Virtual Synchronous Machine implementation for distributed control of power converters in SmartGrids," *Electr. Power Syst. Res.*, vol. 122, pp. 180–197, 2015.

[18] L. Zhang, L. Harnefors, and H. P. Nee, "Power-synchronization control of grid-connected voltage-source converters," *IEEE Trans. Power Syst.*, vol. 25, no. 2, pp. 809–820, 2010.

[19] M. Ndreko, S. Rüberg, and W. Winter, "Grid Forming Control for Stable Power Systems with up to 100 % Inverter Based Generation : A Paradigm Scenario Using the IEEE 118-Bus System," in *17th International Wind Integration Workshop*, 2018, no. 17.

[20] L. Yu, R. Li, and L. Xu, "Distributed PLL-based Control of Offshore Wind Turbine Connected with Diode-Rectifier based HVDC Systems," *IEEE Trans. Power Deliv.*, vol. 33, no. 3, pp. 1328–1336, 2018.